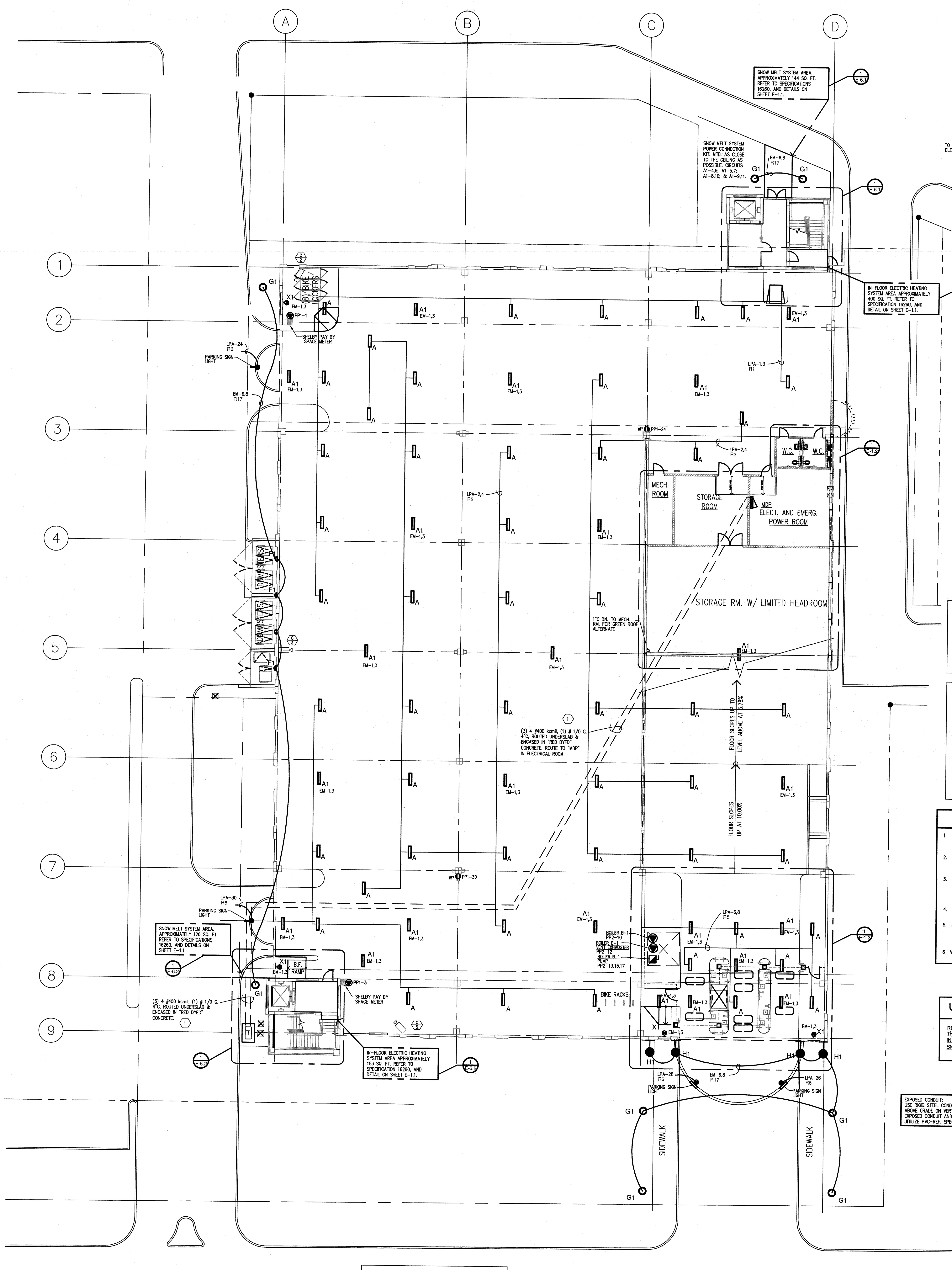

GROUND LEVEL FLOOR PLAN – ELECTRICAL

SCALE: 1/16" = 1'-0"

GRADE CONVERSION:
100.00 DRAWING BASE = EL. 612.25
PER SITE PLAN DATUM

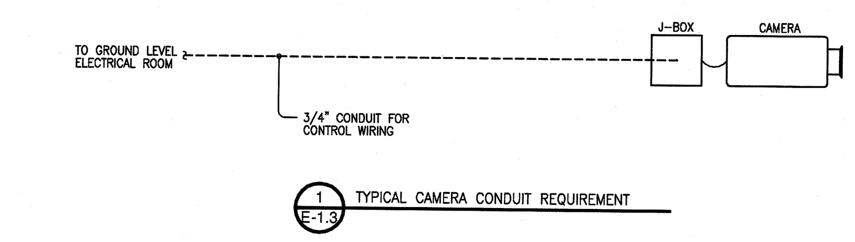

TYPICAL CAMERA CONDUIT REQUIREMENT

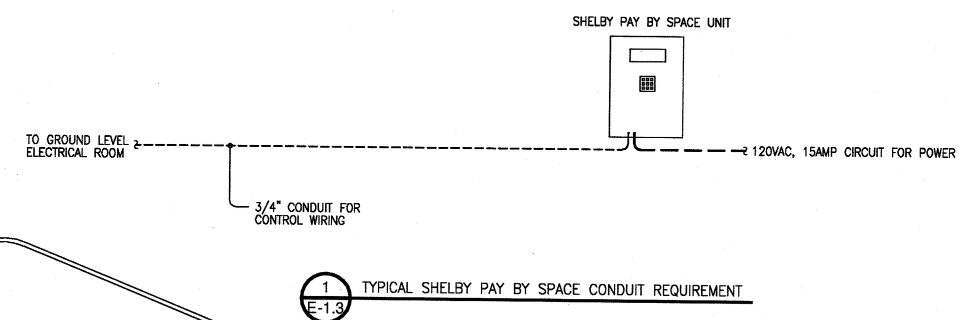

TYPICAL SHELBY PAY BY SPACE CONDUIT REQUIREMENT

TELEPHONE CONDUIT/WIRING NOTES:

ROUTE 1" CONDUIT FOR TELEPHONE FROM THE BACK BOARD IN THE SOUTHWEST CORNER OF THE ELECTRICAL & EMERGENCY POWER ROOM TO:
- BOTH ELEVATOR MACHINE ROOMS
- PARKING CONTROL BOOTH
- BOTH SHELBY "PAY BY SPACE" METERS

PROVIDE CAT 5E WIRING TO EACH AREA NOTED ABOVE AND TERMINATE THE WIRING IN RJ45 CONECTORS

ELECTRICAL / MECHANICAL NOTES:

WHERE EXPOSED, VERTICAL ELECTRICAL CONDUIT RUNS ARE TO BE LOCATED TIGHT TO FACE OF ALL WALLS AS INDICATED ON PLANS.

HORIZONTAL ELECTRICAL CONDUIT RUNS ARE TO BE LOCATED TIGHT TO UNDERSIDE OF ALL P.C.C. C.I.P. CONC. AND/OR STEEL FRAMING MEMBERS.

ELECTRICAL CONTRACTOR TO COORDINATE WITH PRECASTER ALL REQUIRED P.C.C. PENETRATIONS FOR CONDUIT RUNS AND ATTACHMENTS.

MECHANICAL/PLUMBING TRADES TO COORDINATE WITH PRECASTER ALL REQUIRED P.C.C. PENETRATIONS AND ANCHORAGE.

UNLESS OTHERWISE NOTED, MAINTAIN 8'-2" CLEAR HEADROOM IN ALL DRIVE LANES AND PARKING STALLS TO ANY ELECT. OR MECH. FIXTURES.

GENERAL NOTES:

1. VERIFY DOOR SWING AND CORRESPONDING SWITCH LOCATIONS WITH ARCHITECTURAL DRAWINGS.
2. CONNECT ALL EXIT SIGNS AND EMERGENCY/EGRESS FIXTURES TO EMERGENCY LIGHTING POWER.
3. THE LIGHT FIXTURE IDENTIFICATIONS THAT HAVE A NUMBER 1 AFTER THE LETTER DESIGNATION, REPRESENT LIGHTS THAT ARE ON EMERGENCY POWER AND SHALL OPERATE AT LOSS OF NORMAL POWER.
4. ALL CIRCUITS SHALL BE LABELED AT THE PANEL.
5. FOR MULTIPLE CIRCUITS SHOWN IN JUNCTION BOXES A SEPARATE NEUTRAL CONDUCTOR SHALL BE PROVIDED FOR EACH CIRCUIT.
6. VERIFY ALL DATA/PHONE LOCATIONS AND SECURITY SYSTEM WITH OWNER.

GENERAL ELECTRICAL NOTES:

1. REFER TO ARCHITECTURAL REFLECTED CEILING PLAN FOR EXACT LOCATION OF ALL LIGHT FIXTURES, UNLESS OTHERWISE NOTED.
2. SEE LIGHT FIXTURE SCHEDULE, DRAWING E1.1 FOR LIGHT FIXTURE TYPES.
3. EXIT LIGHTS AND EMERGENCY BATTERY UNITS SHALL BE UNCONTROLLED AND TIED AHEAD OF L:OCAL AREA LIGHTING SWITCH, UNLESS CIRCUITED OTHERWISE.
4. WHERE MORE THAN ONE LIGHT SWITCH IS INDICATED TO BE INSTALLED AT THE SAME LOCATION, THEY SHALL BE GROUPED UNDER ONE COMMON FACEPLATE.
5. ALL ELECTRICAL DEVICES SHOWN ON THIS PLAN SHALL BE NEW.
6. ANY 120 VOLT BRANCH CIRCUIT FEEDER LONGER THAN 120'-0" TO THE LAST DEVICE SHALL BE SIZED TO THE NEXT LARGER STANDARD AWG SIZE (SEE CHART). E.C SHALL FIELD VERIFY ALL LENGTHS OF FEEDERS.
7. ALL RECEPTACLES SHALL BE 20A RATED.
8. ALL DISCONNECT SWITCHES SHALL BE HEAVY DUTY TYPE.
9. ALL RECEPTACLES WITHIN 6'-0" OF SINK OR OTHER WATER SUPPLY SHALL BE GFCI TYPE RECEPTACLE.
10. REFER TO ARCHITECTURAL FLOOR PLANS AND ELEVATIONS FOR EXACT LOCATION OF DEVICES.
11. ALL JUNCTION BOXES SERVING BRANCH CIRCUIT WIRING SHALL BE LABELED WITH CIRCUITS SERVED.
12. ALL 120 VOLT CIRCUITS SHALL UTILIZE A SEPARATE NEUTRAL.
13. ALL CIRCUITS SERVING 120 VOLTS OR GREATER SHALL INCLUDE A GROUND WIRE.
14. ALL CONDUITS SHALL BE ROUTED CONCEALED UNLESS NOTED OTHERWISE.
15. ALL GENERAL EQUIPMENT MOUNTED ON THE FLOOR SHALL BE MOUNTED ON A 4" CONCRETE HOUSE KEEPING PAD.

CAMERA LEGEND

- FIXED VANDAL PROOF DOME CAMERA (BY OTHERS), FED WITH 1"C, BY E.C.
- COLOR PTZ DAY/NIGHT CAMERA (BY OTHERS), FED WITH 1"C, BY E.C.

ELECTRICAL KEYED NOTES

1. (3) 4" CONDUITS ROUTED UNDERGROUND FOR INCOMING ELECTRICAL SERVICE FROM UNDERGROUND TCL&P METERED CT CABINET.

UNDER SLAB AND EDGE INSULATION

REFER TO SPEC. SECTION 230710. THE ELECTRICAL CONTRACTOR IS RESPONSIBLE TO SUPPLY AND INSTALL ALL INSULATION ASSOCIATED WITH THE INFLOOR AND SNOW MELT ELECTRICAL HEATING SYSTEM.

EXPOSED CONDUIT:
USE RIGID STEEL CONDUIT OR EMT UP TO 8'-0" ABOVE GRADE ON VERTICAL RUNS. ALL OTHER EXPOSED CONDUIT AND HORIZONTAL RUNS SHALL UTILIZE PVC-REF. SPECIFICATION SECTION 260534

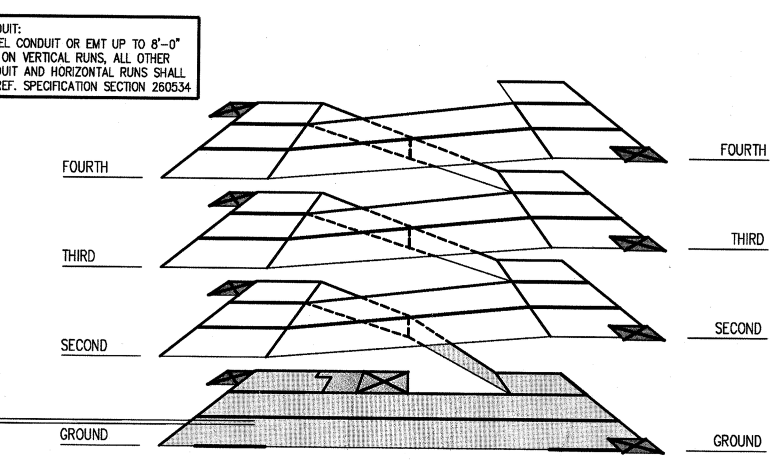

ISOMETRIC – BASE

SCALE: NONE

ELECTRIC SNOW MELT SYSTEM DETAILS (ELECTRIC IN-FLOOR HEAT SYSTEM SIMILAR)

NO SCALE

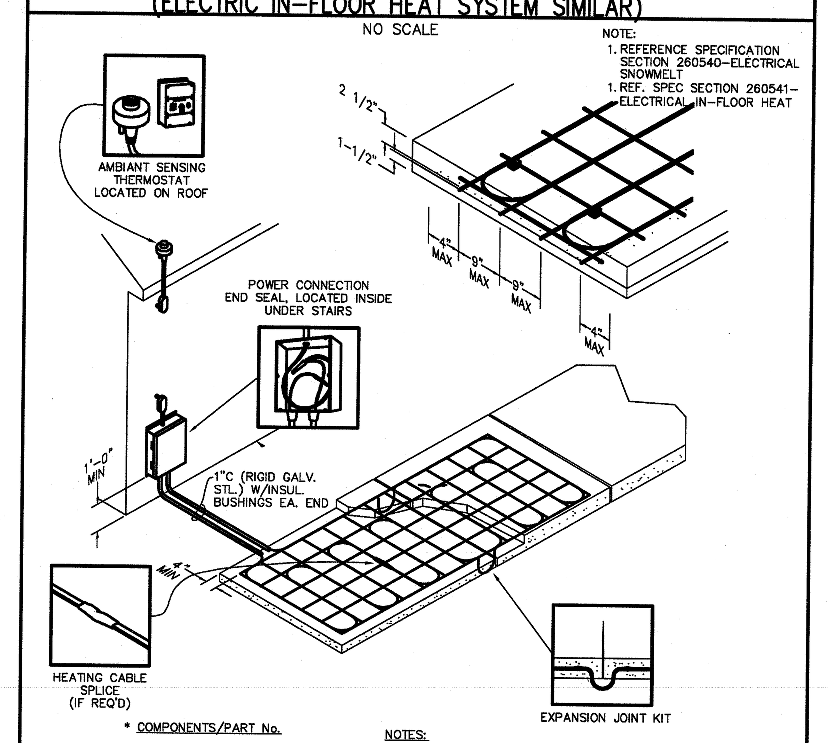

NOTE:
1. REFERENCE SPECIFICATION SECTION 260540-ELECTRICAL SNOWMELT
1. REF. SPEC SECTION 260541-ELECTRICAL IN-FLOOR HEAT

* COMPONENTS/PART No.
1. POWER CONNECTION KIT (INCL. END SEAL)/EMK-XP
2. EXPANSION JOINT KITS/ EMK-XEJ
3. CABLE TIES/EMK-CT
4. CONTACTOR/E104 OR EQUAL
5. SELF-REGULATING HEATING CABLE/ (200 FT. MAX.)/EM2-XR
6. TEMP. CONTROL STAT/AMC-1A W/ CLEAR LOCKABLE COVER
7. JUNCTION BOX/EMK-XJB
8. CABLE SPLICE KIT/EMK-XS

NOTES:
1. * BASED ON RAYCHEM, "ELECTROMELT" SYSTEM
2. CONSULT MANUFACTURER'S REP. FOR EXACT INSTALLATION DETAILS AND ADDITIONAL INFORMATION.
3. CIRCUIT BREAKERS TO BE: SQUARE D #QO-EPD OR #QOB-EPD, WITH 30mA TRIP LEVEL

LIGHTING FIXTURE SCHEDULE

		APPROVED ALTERNATE MANUFACTURERS
A	FAIL-SAFE #FPS-2S4T5-UNV-EB1, 1'X4' PENDANT STEM MOUNTED POLYCARBONATE HIGH ABUSE FLUORESCENT FIXTURE, W/ (2)F54T5 LAMPS (108W)	SPECLIGHT FPG SERIES KURTZON
A1	SAME AS FIXTURE "A", EXCEPT THE FIXTURE IS POWERED BY THE EMERGENCY BATTERY BACK-UP SYSTEM	
B	FAIL-SAFE #FML8-228T5-UNV-0-EB51S-DP, 8"X4' SURFACE MOUNTED POLYCARBONATE FLUORESCENT LINEAR FIXTURE, W/ (2)F28T5 LAMPS (56W)	KENALL MLS12 SERIES KURTZON
B1	SAME AS FIXTURE "B", EXCEPT THE FIXTURE IS POWERED BY THE EMERGENCY BATTERY BACK-UP SYSTEM	
C	METALUX #AF-228T5-UNV-EB81-U, 1'X4' CHAIN HUNG INDUSTRIAL FLUORESCENT FIXTURE W/ 10% UPLIGHT & (2)F28T8 LAMPS (58W)	LITHONIA AF SERIES LIGHTOLIER
C1	SAME AS FIXTURE "C", EXCEPT THE FIXTURE IS POWERED BY THE EMERGENCY BATTERY BACK-UP SYSTEM	
D	METALUX #VT3-228TSDR-UNV-EBT1-W-U, 7"X4' SURFACE MOUNTED INDUSTRIAL VAPORTITE FLUORESCENT FIXTURE W/ & (2)F28T5 LAMPS (56W)	LITHONIA DMW SERIES LIGHTOLIER
E	INVUE #SDM2-250MP-MT-3S-DP-FR-L, ROUND CONTOUR BACK TO BACK SITE LIGHT/POLE MOUNTED W/ (2)250W METAL HALIDE LAMPS (500W)	LITHONIA LIGHTOLIER
EP	UNITED LIGHTING STANDARDS #RTHA-63202-WB. DAMP.-DP, 20' HINGED LIGHTPOLE/BASE ASSEMBLY FOR (2) TYPE "E" FIXTURES	
F	LUMARK IMPACT #CFIPS-64-8-DP, QUARTER SPHERE, WALL MOUNT – W/ (2) 32W COMPACT FLUORESCENT LAMPS (64W)	
F1	LUMARK IMPACT #CFIPS-64-8-DP, QUARTER SPHERE, WALL MOUNT – CONNECTED TO THE EMERGENCY BATTERY BACK-UP SYSTEM & (2)32W COMPACT FLUORESCENT LAMPS (64W)	
G1	BEGA #8670P-UNV-SLV, UNSHIELDED BOLLARD W/ SYMMETRICAL LIGHT OUTPUT & (1)39W COMPACT FLUORESCENT LAMP (39W)-CONNECTED TO THE BATTERY BACK-UP SYSTEM	
H1	BEGA #4431P-UNV-SLV, WALL MOUNTED LUMINAIRE W/ (1)18W COMPACT FLUORESCENT LAMP (18W) – CONNECTED TO THE EMERGENCY BATTERY BACK-UP SYSTEM	
J1	AMETRIX #A04-S0-A-2-LF-028-UNV-S-AK6-IL35, 4' LINEAR FLUORESCENT (1) 28W, WALL MOUNTED FIXTURE-CONNECTED TO THE EMERGENCY BATTERY BACK-UP SYSTEM	
K1	FAILSAFE #2VRGCB-232-ACTF140-UNV-ERB1-U, VANDAL RESISTANT LAY-IN 2'X4' FIXTURE – CONNECTED TO THE EMERGENCY BATTERY BACK-UP SYSTEM & (2)32W FLUORESCENT LAMPS	LITHONIA LIGHTOLIER
X1	SUR-LITES #UX6100RBK, LED EMERGENCY EXIT LIGHT FIXTURE, WET LOCATION AND HIGH ABUSE AREAS, WALL MOUNTED CONNECTED TO THE EMERGENCY BATTERY BACK-UP SYSTEM	LITHONIA LV EL N SERIES LIGHTOLIER

LIGHT FIXTURE BASED ON COOPER LIGHTING.
CONTACT: ORTES, TIDEY & ASSOCIATES @ 231-941-8686 FOR LIGHTING FIXTURE QUOTE.

LIGHTING FIXTURE SCHEDULE NOTES:

1. REFER TO ELECTRICAL WRITTEN SPECIFICATIONS FOR MORE INFORMATION.
2. ALL LIGHT FIXTURES SHALL BE U.L. LABELED.
3. FIRST MANUFACTURER LISTED IS BASIS OF DESIGN. OTHER MANUFACTURERS LISTED ARE APPROVED MANUFACTURERS, HOWEVER, LIGHT FIXTURES SUBMITTED FROM OTHER APPROVED MANUFACTURERS MUST HAVE PRE-APPROVED CATALOG CUTS BEFORE BIDDING.

FIXTURE "A" INSTALLATION DETAIL

NOT TO SCALE

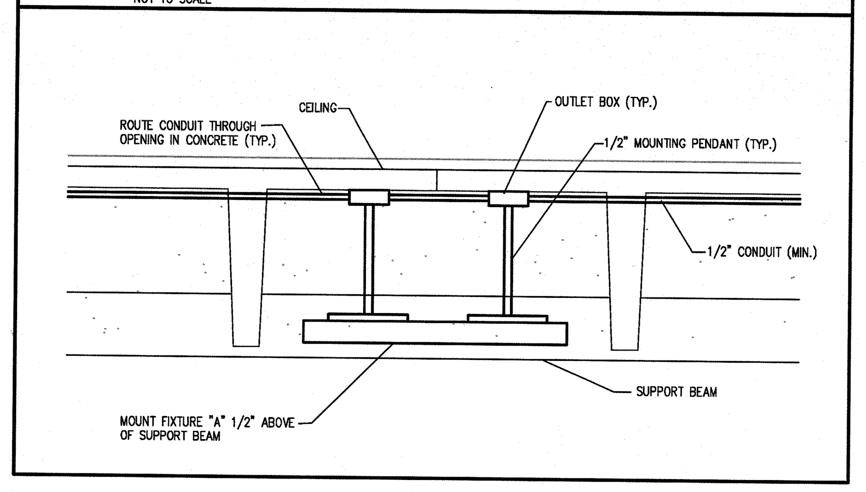

ELECTRICAL SYMBOL LEGEND

SYMBOL	DESCRIPTION	NOTES
S	SINGLE POLE SWITCH	MOUNT @ 44" A.F.F. TO BOTTOM OF BOX, UNLESS OTHERWISE NOTED
S3	THREE-WAY SWITCH	MOUNT @ 44" A.F.F. TO BOTTOM OF BOX, UNLESS OTHERWISE NOTED
	ROUND FIXTURE, TYPE X	SEE LIGHTING FIXTURE SCHEDULE FOR TYPES
	6"x4' FLUORESCENT FIXTURE, TYPE X A IS THE LENGTH, DETERMINED BY DRAWINGS	SEE LIGHTING FIXTURE SCHEDULE FOR TYPES
	POLE MOUNTED, DUAL HEAD FIXTURE	SEE LIGHTING FIXTURE SCHEDULE FOR TYPES
	1'x4' FIXTURE, TYPE X	SEE LIGHTING FIXTURE SCHEDULE FOR TYPES
	EXIT SIGN, TYPE X	SEE LIGHTING FIXTURE SCHEDULE FOR TYPES
	DUPLEX OUTLET – 20 AMP	MOUNT @ 16" A.F.F. TO BOTTOM OF BOX, UNLESS OTHERWISE NOTED
	DUPLEX OUTLET – WEATHER PROOF COVER	MOUNT @ 24" A.F.F. TO BOTTOM OF BOX, UNLESS OTHERWISE NOTED
	DUPLEX OUTLET – GROUND FAULT	MOUNT @ 16" A.F.F. TO BOTTOM OF BOX, UNLESS OTHERWISE NOTED
	SPECIAL PURPOSE OUTLET, AS NOTED	REFER TO SHOP DRAWINGS FOR CONNECTION REQUIREMENTS
	ELECTRIC VEHICLE CHARGING STATION	EQUAL TO COULOMB INDUSTRIES CHARGEPOINT NETWORKED CHARGING STATIONS – MODEL CT1003 WALL MOUNTED STATION, 208V, 32A, SINGLE PHASE, NEMA 5-15 AND SAEJ1772 CHARGING CONNECTION, NEMA 3R ENCLOSURE, MTD. @ 48" A.F.F. TO TOP OF HOUSING.
	SMOKE DETECTOR	
	MOTOR, AS SPECIFIED	
HD	HANDI-CAP DOOR OPENER	FROM J-BOX RUN CONDUIT TO 'HD'. INSTALLATION OF EQUIPMENT IS BY G.C., 120V WIRING IS BY E.C. (TYPICAL)
	CARD READER	
	JUNCTION BOX	
	FUSED OR NON-FUSED DISCONNECT	
	STARTER OR COMB. DISC./STARTER	
	SSU OR FUSE-STAT	
	DISTRIBUTION POWER PANELS	REFER TO SPEC'S SECTION 16470, AND ONE-LINE DIAGRAM.
	LIGHTING/BRANCH CIRCUIT PANELS	REFER TO SPEC'S SECTION 16470, AND ONE-LINE DIAGRAM.
	LIGHTING CONTROL PANEL	REFER TO SPEC'S SECTION 16470, AND ONE-LINE DIAGRAM.
	TELEPHONE AND/OR SECURITY SYSTEM BACKBOARD	PROVIDE 4'X8', 3/4" FIRE RATED PLYWOOD FOR BACKBOARD
S.P.	SECURITY SYSTEM PANEL	MOUNT @ 44" A.F.F. TO BOTTOM OF BOX. REFER TO SPEC'S SECTION 16945
AC	ABOVE COUNTER	
1-21	CIRCUIT FROM PANEL 1, CIRCUIT 21	
T	MECHANICAL THERMOSTAT	E.C. TO PROVIDE SINGLE GANG BOX WITH 1/2" CONDUIT STUBBED TO UNIT TO BE CONTROLLED. REFERENCE MECHANICAL PLANS FOR MORE INFORMATION. POWER WIRING TO BE IN ANOTHER CONDUIT SYSTEM. MTD. @ 44" A.F.F. TO BOTTOM OF BOX.

OLD TOWN PARKING DECK

TRAVERSE CITY, MICHIGAN

RICH & ASSOCIATES
Parking Consultants
Architects · Engineers
Planners
26877 Northwestern Hwy., Suite 208
Southfield, Michigan 48033
Tel: 248.353.5080
Fax: 248.353.3830
Lutz, Florida
Tel: 813.949.9860
www.RichAssoc.com

ARCHITECTS CWS
513 South Union
Traverse City, Michigan
231.946.3627 Voice231.946.1234 Fax

CHANGES TO PLANS AND SPECIFICATIONS

ANY CHANGE INCLUDING ALTERATION, MODIFICATION, ADDITION, DELETION OR DEVIATION BY THE OWNER, ARCHITECT, CONTRACTOR, SUB-CONTRACTOR OR ANY OTHER PARTY OF ANY OF THE CONTRACT DOCUMENTS INCLUDING, BUT NOT LIMITED TO, THE PLANS AND SPECIFICATIONS AS SUBMITTED BY THE ENGINEER, SHALL NOT BE BINDING UPON OR CONSIDERED TO BE THE WORK OF THE ENGINEER. ANY SUCH CHANGE BY THE OWNER, ARCHITECT, CONTRACTOR, SUB-CONTRACTOR OR ANY OTHER PARTY, WITHOUT THE WRITTEN APPROVAL OF THE ENGINEER SHALL NOT BE THE RESPONSIBILITY OF THE ENGINEER. THE PARTY WHO MADE THE CHANGE SHALL DEFEND, INDEMNIFY AND HOLD HARMLESS THE ENGINEER FROM ANY AND ALL LIABILITY RESULTING FROM SUCH CHANGE.

Bayshore engineering inc.
2048 NORTH AVE.
TRAVERSE CITY
MICHIGAN 49686
PH. (231) 941-4151
FAX (231) 941-4960

PROJECT NO. 0901–02

THESE DRAWINGS ARE THE PROPERTY OF THE ENGINEER AND ARE NOT TO BE REUSED OR REPRODUCED WITHOUT HIS WRITTEN PERMISSION. THIS DRAWING IS COPY WRITTEN.

Date	ISSUED FOR:	By
07-02-09	DESIGN DEVELOPMENT	
08-06-09	50% CONSTRUCTION DOCUMENTS	
08-20-09	FINAL OWNER REVIEW	
09-03-09	BIDDING	
10-06-09	PERMIT	

Sheet Title:

GROUND LEVEL FLOOR PLAN ELECTRICAL

Drawn By	LEM
Checked By	LEM
File Name	0923A-1_1
Plot Date	09-02-09

Detail Number / Detail Sheet

All matter contained hereon, including drawings, written matter, ideas or concepts, are the creation of Rich and Associates, Inc. for the specific project and shall remain the property of Rich and Associates, Inc. No disclosure thereof in any form whatsoever shall be made to any person, firm, corporation, agency or organization, including news media without the written consent of Rich and Associates, Inc. except as required for the physical completion of the specific project.

File No	0923
Date	09-03-09
Scale	AS NOTED
Last Rev.	

Sheet Number:

E – 1.1

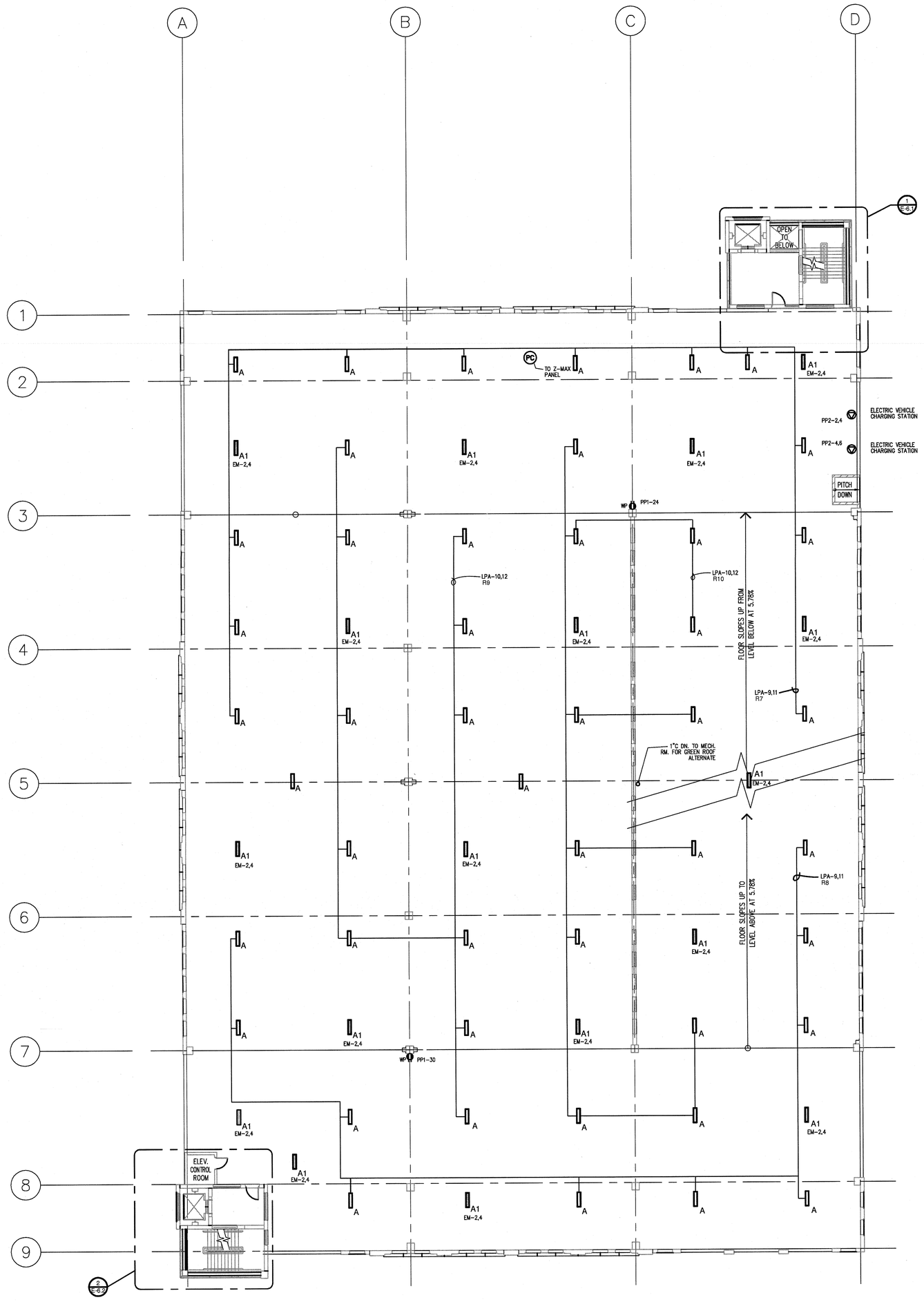

NORTH

SECOND LEVEL FLOOR PLAN – ELECTRICAL

SCALE: 1/16" = 1'-0"

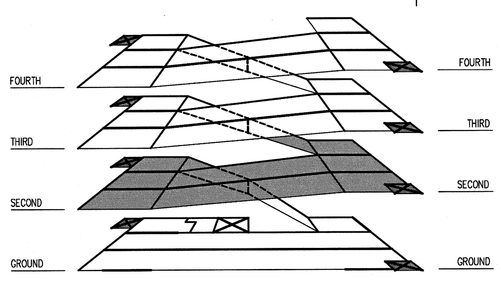

ISOMETRIC – BASE

SCALE: NONE

GENERAL ELECTRICAL NOTES:

1. REFER TO ARCHITECTURAL REFLECTED CEILING PLAN FOR EXACT LOCATION OF ALL LIGHT FIXTURES, UNLESS OTHERWISE NOTED.
2. SEE LIGHT FIXTURE SCHEDULE, DRAWING E1.1 FOR LIGHT FIXTURE TYPES.
3. EXIT LIGHTS AND EMERGENCY BATTERY UNITS SHALL BE UNCONTROLLED AND TIED AHEAD OF LOCAL AREA LIGHTING SWITCH, UNLESS CIRCUITED OTHERWISE.
4. WHERE MORE THAN ONE LIGHT SWITCH IS INDICATED TO BE INSTALLED AT THE SAME LOCATION, THEY SHALL BE GROUPED UNDER ONE COMMON FACEPLATE.
5. ALL ELECTRICAL DEVICES SHOWN ON THIS PLAN SHALL BE NEW.
6. ANY 120 VOLT BRANCH CIRCUIT FEEDER LONGER THAN 120'-0" TO THE LAST DEVICE SHALL BE SIZED TO THE NEXT LARGER STANDARD AWG SIZE (SEE CHART). E.C SHALL FIELD VERIFY ALL LENGTHS OF FEEDERS.
7. ALL RECEPTACLES SHALL BE 20A RATED.
8. ALL DISCONNECT SWITCHES SHALL BE HEAVY DUTY TYPE.
9. ALL RECEPTACLES WITHIN 6'-0" OF SINK OR OTHER WATER SUPPLY SHALL BE GFCI TYPE RECEPTACLE.
10. REFER TO ARCHITECTURAL FLOOR PLANS AND ELEVATIONS FOR EXACT LOCATION OF DEVICES.
11. ALL JUNCTION BOXES SERVING BRANCH CIRCUIT WIRING SHALL BE LABELED WITH CIRCUITS SERVED.
12. ALL 120 VOLT CIRCUITS SHALL UTILIZE A SEPARATE NEUTRAL.
13. ALL CIRCUITS SERVING 120 VOLTS OR GREATER SHALL INCLUDE A GROUND WIRE.
14. ALL CONDUITS SHALL BE ROUTED CONCEALED UNLESS NOTED OTHERWISE.
15. ALL GENERAL EQUIPMENT MOUNTED ON THE FLOOR SHALL BE MOUNTED ON A 4" CONCRETE HOUSE KEEPING PAD.

CAMERA LEGEND

(F) FIXED VANDAL PROOF DOME CAMERA (BY OTHERS), FED WITH 1"C. BY E.C..

(S) COLOR PTZ DAY/NIGHT CAMERA (BY OTHERS), FED WITH 1"C. BY E.C.

HAND DRYER DESCRIPTION

EHD–1	HAND DRYER: RECESSED TOUCH BUTTON OPERATION, COLOR – WHITE 208V, 20A, 1900W 50/60 Hz, 30 SECOND CYCLE SENSOR OPERATED, 150 CFM EQUAL TO BOBRICK WASHROOM EQUIPMENT, INC. MODEL B-700-230V.

ELECTRIC WALL HEATER SCHEDULE

MARK	MODEL No.	CFM	HEATING CAPABILITY KW/BTUH	ELECTRICAL VOLTS	ELECTRICAL AMPS	ACCESSORIES
EWH–1	CH3D02ATW	250	2.0/6840	208V, 1ø	9.6	WITH OPTIONAL CIRCUIT BREAKER & REMOTE THERMOSTAT–SEE NOTE #3

NOTES:

1. BASED ON ELECTROMODE, MARKEL IS CONSIDERED EQUAL.
2. WALL MOUNTED CABINET.
3. E.C. TO PROVIDE REMOTE LINE VOLTAGE THERMOSTAT W/ LOCKABLE COVER.

ELECTRIC UNIT HEATER SCHEDULE

MARK	MODEL No.	AIRFLOW CFM	HEATING CAPABILITY KW/BTUH	ELECTRICAL VOLTS	ELECTRICAL AMPS	ACCESSORIES
EUH–1	EUH08B24CT	600	7.5/25590	208V, 1ø	36.1	SEE NOTES, E.C. TO PROVIDE UNIT MOUNTED DISCONNECT.
EUH–2	EUH05B21T	350	5.0/17060	208V, 1ø	24.0	SEE NOTES, E.C. TO PROVIDE UNIT MOUNTED DISCONNECT.
EUH–3	EUH03B31T	350	2.3/7677	208V, 1ø	11.1	SEE NOTES, E.C. TO PROVIDE UNIT MOUNTED DISCONNECT.

NOTES:

1. BASED ON ELECTROMODE, MARKEL IS CONSIDERED EQUAL.
2. CABINETS WALL MOUNTED WITH WALL HANGER BRACKET, MODEL #EUHWB.
3. REMOTE LOW VOLTAGE THERMOSTAT USED WITH 24V LOW VOLTAGE RELAY/TRANSFORMER KIT, MODEL #EUAR21.

INVERTER/EMERGENCY BACK-UP POWER SYSTEM

EM–1	CONTROLLED POWER COMPANY MODEL # ELU–LLX–12.5KW–1510. LIGHTING INVERTER, 208V INPUT/208V OUTPUT, 12.5 KW, FULL LOAD BTUH = 5847, STANDBY BTUH = 1065, MSDHT = .368x .6W, RUN TIME @ FULL LOAD = 90 MINUTES MINIMUM, REF. SPEC. SECTION 263300. ACCESSORIES INCLUDE (4) PRE–INSTALLED, DOUBLE PAIR, 20A OUTPUT CIRCUIT BREAKERS FOR USE WITH UNINTERRUPTED POWER SUPPLY.

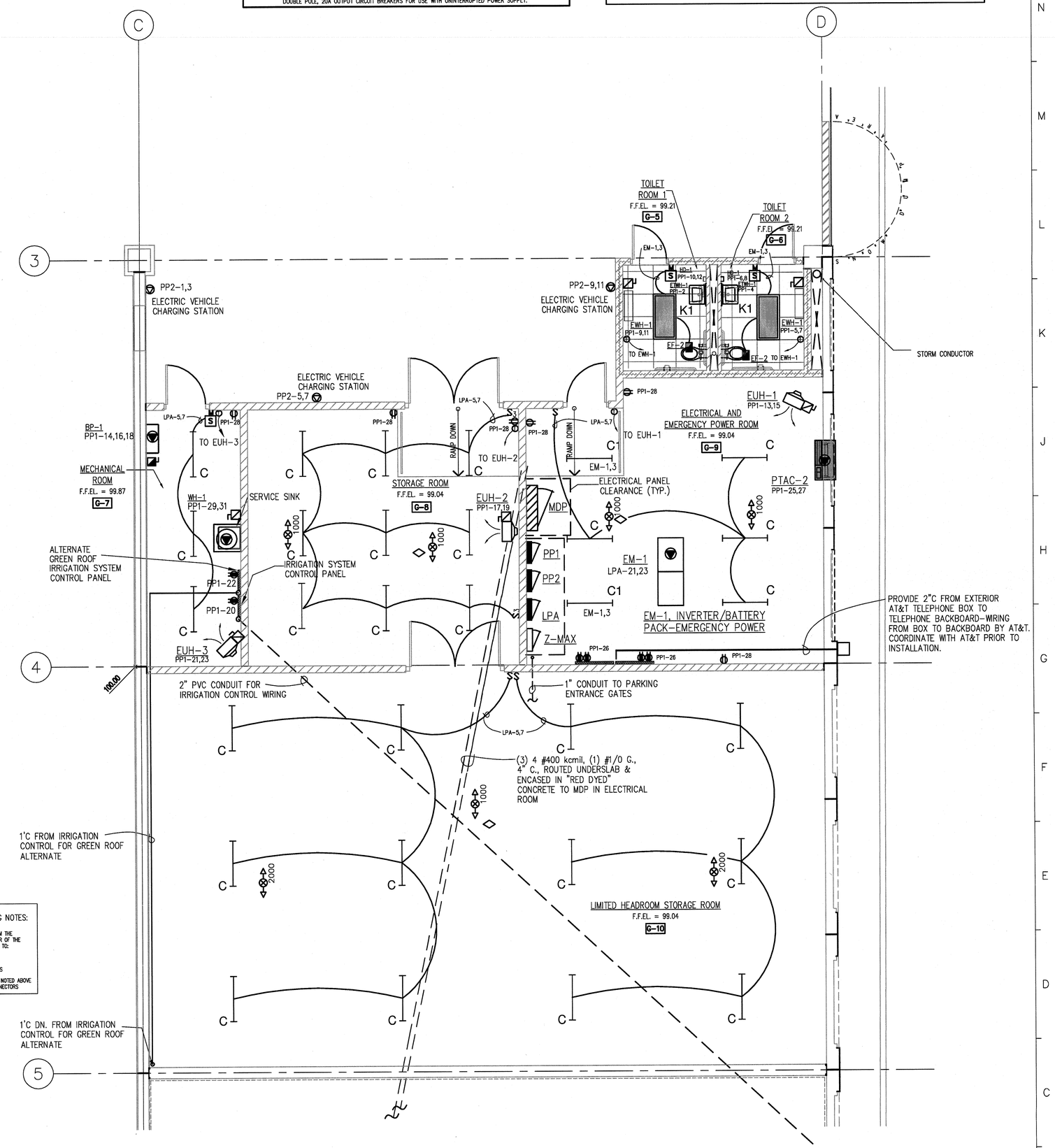

ENLARGED ROOM(S) PLAN

SCALE: 3/16" = 1'-0"

1 / E1.2

TELEPHONE CONDUIT/WIRING NOTES:

ROUTE 1" CONDUIT FOR TELEPHONE FROM THE BACK BOARD IN THE SOUTHWEST CORNER OF THE ELECTRICAL & EMERGENCY POWER ROOM TO:

* BOTH ELEVATOR MACHINE ROOMS
* PARKING CONTROL BOOTH
* BOTH SHELBY "PAY BY SPACE" METERS

PROVIDE CAT 5E WIRING TO EACH AREA NOTED ABOVE AND TERMINATE THE WIRING IN RJ45 CONECTORS

EXPOSED CONDUIT:
USE RIGID STEEL CONDUIT OR EMT UP TO 8'–0" ABOVE GRADE ON VERTICAL RUNS. ALL OTHER EXPOSED CONDUIT AND HORIZONTAL RUNS SHALL UTILIZE PVC–REF. SPECIFICATION SECTION 260534

ELECTRICAL / MECHANICAL NOTE:

WHERE EXPOSED, VERTICAL ELECTRICAL CONDUIT RUNS ARE TO BE LOCATED TIGHT TO FACE OF ALL WALLS AS INDICATED ON PLANS.

HORIZONTAL ELECTRICAL CONDUIT RUNS ARE TO BE LOCATED TIGHT TO UNDERSIDE OF ALL P.C.C., C.I.P. CONC. AND/OR STEEL FRAMING MEMBERS.

ELECTRICAL CONTRACTOR TO COORDINATE WITH PRECASTER ALL REQUIRED P.C.C. PENETRATIONS FOR CONDUIT RUNS AND ATTACHMENTS.

MECHANICAL/PLUMBING TRADES TO COORDINATE WITH PRECASTER ALL REQUIRED P.C.C. PENETRATIONS AND ANCHORAGE.

UNLESS OTHERWISE NOTED, MAINTAIN 8'–2" CLEAR HEADROOM IN ALL DRIVE LANES AND PARKING STALLS TO ANY ELECT. OR MECH. FIXTURES.

OLD TOWN PARKING DECK

TRAVERSE CITY, MICHIGAN

RICH & ASSOCIATES
Parking Consultants
Architects · Engineers
Planners
26877 Northwestern Hwy., Suite 208
Southfield, Michigan 48033
Tel: 248.353.5080
Fax: 248.353.3830
Lutz, Florida
Tel: 813.949.9860
www.RichAssoc.com

ARCHITECTS CWS
513 South Union
Traverse City, Michigan
231.946.3627 Voice231.946.1234 Fax

Bayshore engineering inc.
2048 NORTH AVE.
TRAVERSE CITY
MICHIGAN 49686
PH. (231) 941-4151
FAX (231) 941-4960

CHANGES TO PLANS AND SPECIFICATIONS

ANY CHANGE INCLUDING ALTERATION, MODIFICATION, ADDITION, DELETION OR OMISSION MADE BY THE OWNER, ARCHITECTS, CONTRACTORS, SUB-CONTRACTOR OR ANY OTHER PARTY OF ANY OF THE CONTRACT DOCUMENTS INCLUDING, BUT NOT LIMITED TO, THE PLANS AND SPECIFICATIONS AS SUBMITTED BY THE ENGINEER, SHALL NOT BE BINDING UPON OR CONSIDERED TO BE THE WORK OF THE ENGINEER. ANY SUCH CHANGE BY THE OWNER, ARCHITECT, CONTRACTOR, SUB-CONTRACTOR OR ANY OTHER PARTY OF ANY OF THE CONTRACT DOCUMENTS SHALL, IN ADDITION, BE THE SOLE RESPONSIBILITY OF THE ENGINEER. THE PARTY WHO MADE THE CHANGE SHALL DEFEND, INDEMNIFY AND HOLD HARMLESS THE ENGINEER FROM ANY AND ALL LIABILITY RESULTING FROM SUCH CHANGE.

PROJECT NO.
0901–02

THESE DRAWINGS ARE THE PROPERTY OF RICH AND ASSOCIATES, INC. AND MAY NOT BE REUSED OR REPRODUCED WITHOUT HIS WRITTEN PERMISSION. THIS DRAWING IS COPY WRITTEN.

Date	ISSUED FOR:	By
07–02–09	DESIGN DEVELOPMENT	
08–06–09	50% CONSTRUCTION DOCUMENTS	
08–20–09	FINAL OWNER REVIEW	
09–03–09	BIDDING	
10–06–09	PERMIT	

Sheet Title:

SECOND LEVEL FLOOR PLAN ELECTRICAL

Drawn By	LEM
Checked By	LEM
File Name	0923A–1_2
Plot Date	09–02–09

Detail Number / Detail Sheet

All matter contained hereon, including drawings, written matter, ideas or concepts, are the creation of Rich and Associates, Inc. for the specific project and shall remain the property of Rich and Associates, Inc.. No disclosure thereof in any form whatsoever shall be made to any person, firm, corporation, agency or organization, including news media without the written consent of Rich and Associates, Inc. except as required for the physical completion of the specific project.

File No	0923
Date	09–03–09
Scale	AS NOTED
Last Rev.	

Sheet Number:

E – 1.2

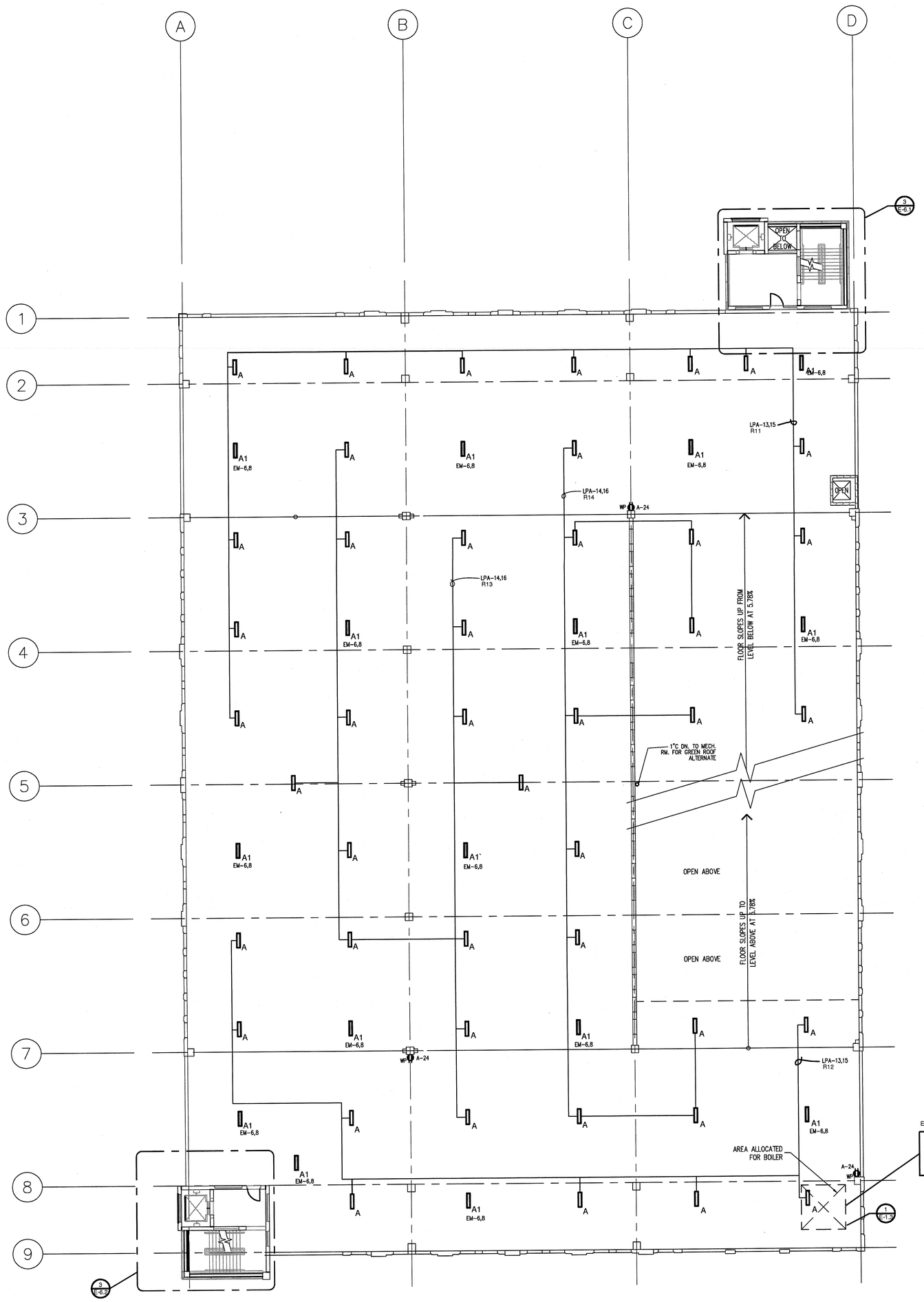

THIRD LEVEL FLOOR PLAN – ELECTRICAL

SCALE: 1/16" = 1'-0"

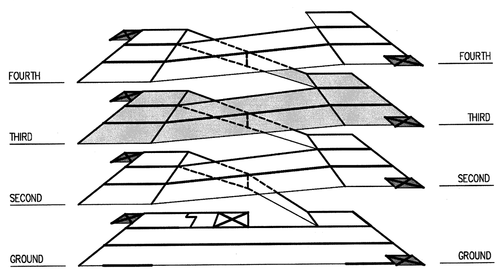

ISOMETRIC – BASE

SCALE: NONE

GENERAL ELECTRICAL NOTES:

1. REFER TO ARCHITECTURAL REFLECTED CEILING PLAN FOR EXACT LOCATION OF ALL LIGHT FIXTURES, UNLESS OTHERWISE NOTED.
2. SEE LIGHT FIXTURE SCHEDULE, DRAWING E1.1 FOR LIGHT FIXTURE TYPES.
3. EXIT LIGHTS AND EMERGENCY BATTERY UNITS SHALL BE UNCONTROLLED AND TIED AHEAD OF LOCAL AREA LIGHTING SWITCH, UNLESS CIRCUITED OTHERWISE.
4. WHERE MORE THAN ONE LIGHT SWITCH IS INDICATED TO BE INSTALLED AT THE SAME LOCATION, THEY SHALL BE GROUPED UNDER ONE COMMON FACEPLATE.
5. ALL ELECTRICAL DEVICES SHOWN ON THIS PLAN SHALL BE NEW.
6. ANY 120 VOLT BRANCH CIRCUIT FEEDER LONGER THAN 120'-0" TO THE LAST DEVICE SHALL BE SIZED TO THE NEXT LARGER STANDARD AWG SIZE (SEE CHART). E.C SHALL FIELD VERIFY ALL LENGTHS OF FEEDERS.
7. ALL RECEPTACLES SHALL BE 20A RATED.
8. ALL DISCONNECT SWITCHES SHALL BE HEAVY DUTY TYPE.
9. ALL RECEPTACLES WITHIN 6'-0" OF SINK OR OTHER WATER SUPPLY SHALL BE GFCI TYPE RECEPTACLE.
10. REFER TO ARCHITECTURAL FLOOR PLANS AND ELEVATIONS FOR EXACT LOCATION OF DEVICES.
11. ALL JUNCTION BOXES SERVING BRANCH CIRCUIT WIRING SHALL BE LABELED WITH CIRCUITS SERVED.
12. ALL 120 VOLT CIRCUITS SHALL UTILIZE A SEPARATE NEUTRAL.
13. ALL CIRCUITS SERVING 120 VOLTS OR GREATER SHALL INCLUDE A GROUND WIRE.
14. ALL CONDUITS SHALL BE ROUTED CONCEALED UNLESS NOTED OTHERWISE.
15. ALL GENERAL EQUIPMENT MOUNTED ON THE FLOOR SHALL BE MOUNTED ON A 4" CONCRETE HOUSE KEEPING PAD.

CAMERA LEGEND

FIXED VANDAL PROOF DOME CAMERA (BY OTHERS), FED WITH 1"C, BY E.C.

COLOR PTZ DAY/NIGHT CAMERA (BY OTHERS), FED WITH 1"C, BY E.C.

ELECTRICAL KEYED NOTES

1. VEHICLE DETECTION LOOP BY OTHERS.
2. CAMERA BY OWNER, E.C. TO PROVIDE BACK BOX AS REQUIRED AND 3/4"C TO SECURITY SYSTEM IN ELECTRICAL ROOM.
3. ROUTE 3/4"C (POWER) AND 1"C (CONTROLS) BACK TO CONTROL GATE FOR TICKET DISPENSER.
4. ROUTE 3/4"C (POWER) AND 1"C (CONTROLS) BACK TO CONTROL GATE FOR EXIT PAYSTATION.
5. PANEL SHALL BE PROVIDED BY BOOTH MANUFACTURER, INSTALLED AND WIRED BY E.C.
6. CONTROL GATE – PROVIDE 120V POWER AND INTERCONNECTING CONDUIT AS INDICATED.
7. PROXIMITY CARD READER – PROVIDE 120V POWER AND INTERCONNECTING CONDUIT AS INDICATED.
8. PROVIDE 1"C FOR PARKING GATE SYSTEM LOW VOLTAGE CONTROLS. ROUTE BACK TO MAIN ELECTRICAL ROOM.
9. BOX FOR LED TRAFFIC SIGNAGE – PROVIDE WITH (1) 3/4"C FOR 120V FEED FROM PP3. COORDINATE EXACT LOCATION OF SIGNAGE WITH ARCHITECTURAL PLANS.
10. (9) CONTROL SUPPLIES FOR CAMERAS – ALL CONTROL SUPPLIES SHALL HAVE LOW VOLTAGE INPUT FROM CONTROL PANEL IN GROUND FLOOR ELECTRICAL ROOM.

CAMERA LEGEND

FIXED VANDAL PROOF CAMERA (BY OTHERS), FED WITH 1"C, BY E.C. BOTTOM NUMBER DENOTES CAMERA NUMBER.

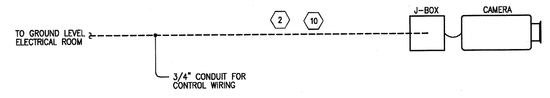

2 / E-1.3 TYPICAL CAMERA CONDUIT REQUIREMENT

TRAFFIC CONTROL EQUIPMENT LEGEND:

- LSx — L.E.D. LANE CONTROL SIGN (9)
- CRx — PROXIMITY CARD READER (7)
- TDx — AMANO AGP-2010 TICKET DISPENSER (3)
- EPx — AMANO AGP-6800 EXIT PAYSTATION (4)
- AGx — AMANO AGP-1710 AUTOGATE (6)
- 2'-6" x 6' VEHICLE DETECTION LOOP (1) BY OTHERS

TRAFFIC CONTROL GENERAL NOTES:

1. KEEP CONDUIT STUBS A MAXIMUM OF 2" ABOVE ISLAND SURFACE.
2. CONDUITS MUST BE CLUSTERED AT CENTER OF EQUIPMENT LOCATIONS UNLESS OTHERWISE INDICATED.
3. ALL POWER CONDUITS AND WIRES MUST BE KEPT A MINIMUM OF 1'-6" FROM DETECTION LOOPS.
4. LEAVE 6' OF CABLE AT EQUIPMENT LOCATIONS.
5. ALL POWER RUNS, CONDUITS AND WIRES ARE BY THE E.C.
6. ALL POWER RUNS SHALL HAVE HOT, NEUTRAL, AND GROUND CONDUCTORS.
7. IF ANY COMMUNICATION WIRE ENDS IN AN OFFICE, LEAVE 20' OF CABLE FOR LOCATIONAL PURPOSES.
8. ALL CONDUITS ARE 1" UNLESS OTHERWISE SPECIFIED.

NOTE: EP1 AND TD2 ARE FUTURE EQUIPMENT. INSTALL AND PROVIDE CONDUIT AS SHOWN DURING INITIAL CONSTRUCTION OF PROJECT. STUB CONDUITS INTO JUNCTION BOXES AT CENTER OF EQUIPMENT LOCATIONS.

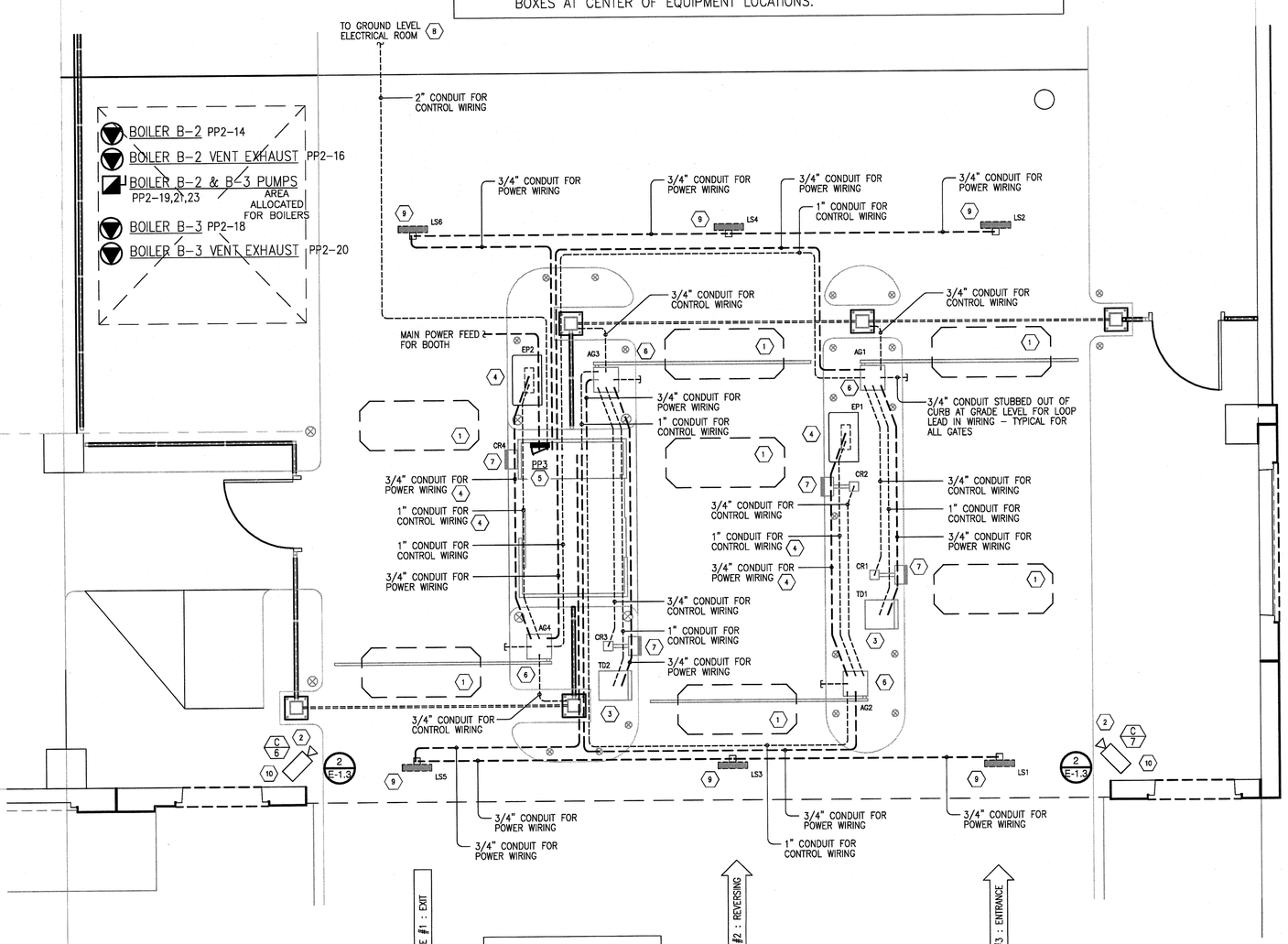

EXPOSED CONDUIT:

USE RIGID STEEL CONDUIT OR EMT UP TO 8'-0" ABOVE GRADE ON VERTICAL RUNS. ALL OTHER EXPOSED CONDUIT AND HORIZONTAL RUNS SHALL UTILIZE PVC-REF. SPECIFICATION SECTION 260534

ELECTRICAL / MECHANICAL NOTE:

WHERE EXPOSED, VERTICAL ELECTRICAL CONDUIT RUNS ARE TO BE LOCATED TIGHT TO FACE OF ALL WALLS AS INDICATED ON PLANS.

HORIZONTAL ELECTRICAL CONDUIT RUNS ARE TO BE LOCATED TIGHT TO UNDERSIDE OF ALL P.C.C., C.I.P. CONC. AND/OR STEEL FRAMING MEMBERS.

ELECTRICAL CONTRACTOR TO COORDINATE WITH PRECASTER ALL REQUIRED P.C.C. PENETRATIONS FOR CONDUIT RUNS AND ATTACHMENTS.

MECHANICAL/PLUMBING TRADES TO COORDINATE WITH PRECASTER ALL REQUIRED P.C.C. PENETRATIONS AND ANCHORAGE.

UNLESS OTHERWISE NOTED, MAINTAIN 8'-2" CLEAR HEADROOM IN ALL DRIVE LANES AND PARKING STALLS TO ANY ELECT. OR MECH. FIXTURES.

TELEPHONE CONDUIT/WIRING NOTES:

ROUTE 1" CONDUIT FOR TELEPHONE FROM THE BACK BOARD IN THE SOUTHWEST CORNER OF THE ELECTRICAL & EMERGENCY POWER ROOM TO:

- BOTH ELEVATOR MACHINE ROOMS
- PARKING CONTROL BOOTH
- BOTH SHELBY "PAY BY SPACE" METERS

PROVIDE CAT 5E WIRING TO EACH AREA NOTED ABOVE AND TERMINATE THE WIRING IN RJ45 CONECTORS

ENLARGED ENTRY / EXIT PLAN

SCALE: 1/4" = 1'-0"

1 / E-1.3

OLD TOWN PARKING DECK

TRAVERSE CITY, MICHIGAN

RICH & ASSOCIATES

Parking Consultants
Architects · Engineers
Planners

26877 Northwestern Hwy., Suite 208
Southfield, Michigan 48033
Tel: 248.353.5080
Fax: 248.353.3830

Lutz, Florida
Tel: 813.949.9860

www.RichAssoc.com

ARCHITECTS CWS

513 South Union
Traverse City, Michigan
231.946.3627 Voice231.946.1234 Fax

CHANGES TO PLANS AND SPECIFICATIONS

ANY CHANGE INCLUDING ALTERATION, MODIFICATION, ADDITION, DELETION OR DEVIATION BY THE OWNER, ARCHITECT, CONTRACTOR, SUB-CONTRACTOR OR ANY OTHER PARTY OF ANY OF THE CONTRACT DOCUMENTS INCLUDING, BUT NOT LIMITED TO, THE PLANS AND SPECIFICATIONS AS SUBMITTED BY THE ENGINEER, SHALL NOT BE BINDING UPON OR CONSIDERED TO BE THE WORK OF THE ENGINEER. ANY SUCH CHANGE BY THE OWNER, ARCHITECT, CONTRACTOR, SUB-CONTRACTOR OR ANY OTHER PARTY WITHOUT THE WRITTEN APPROVAL OF THE ENGINEER SHALL NOT BE THE RESPONSIBILITY OF THE ENGINEER. THE PARTY WHO MADE THE CHANGE SHALL DEFEND, INDEMNIFY AND HOLD HARMLESS THE ENGINEER FROM ANY AND ALL LIABILITY RESULTING FROM SUCH CHANGE.

Bayshore engineering inc.

2048 NORTH AVE.
TRAVERSE CITY
MICHIGAN 49686
PH. (231) 941-4151
FAX (231) 941-4960

PROJECT NO. 0901–02

THESE DRAWINGS ARE THE PROPERTY OF THE ENGINEER AND ARE NOT TO BE REUSED OR REPRODUCED WITHOUT HIS WRITTEN PERMISSION. THIS DRAWING IS COPY WRITTEN.

Date	ISSUED FOR:	By
07–02–09	DESIGN DEVELOPMENT	
08–06–09	50% CONSTRUCTION DOCUMENTS	
08–20–09	FINAL OWNER REVIEW	
09–03–09	BIDS	
10–06–09	PERMIT	

Sheet Title:

THIRD LEVEL FLOOR PLAN ELECTRICAL

Drawn By	LEM
Checked By	LEM
File Name	0923A–1_2
Plot Date	09–02–09

Detail Number / Detail Sheet

All matter contained hereon, including drawings, written matter, ideas or concepts, are the creation of Rich and Associates, Inc. for the specific project and shall remain the property of Rich and Associates, Inc. No disclosure thereof in any form whatsoever shall be made to any person, firm, corporation, agency or organization, including news media without the written consent of Rich and Associates, Inc. except as required for the physical completion of the specific project.

File No	0923
Date	09–03–09
Scale	AS NOTED
Last Rev.	

Sheet Number:

E – 1.3

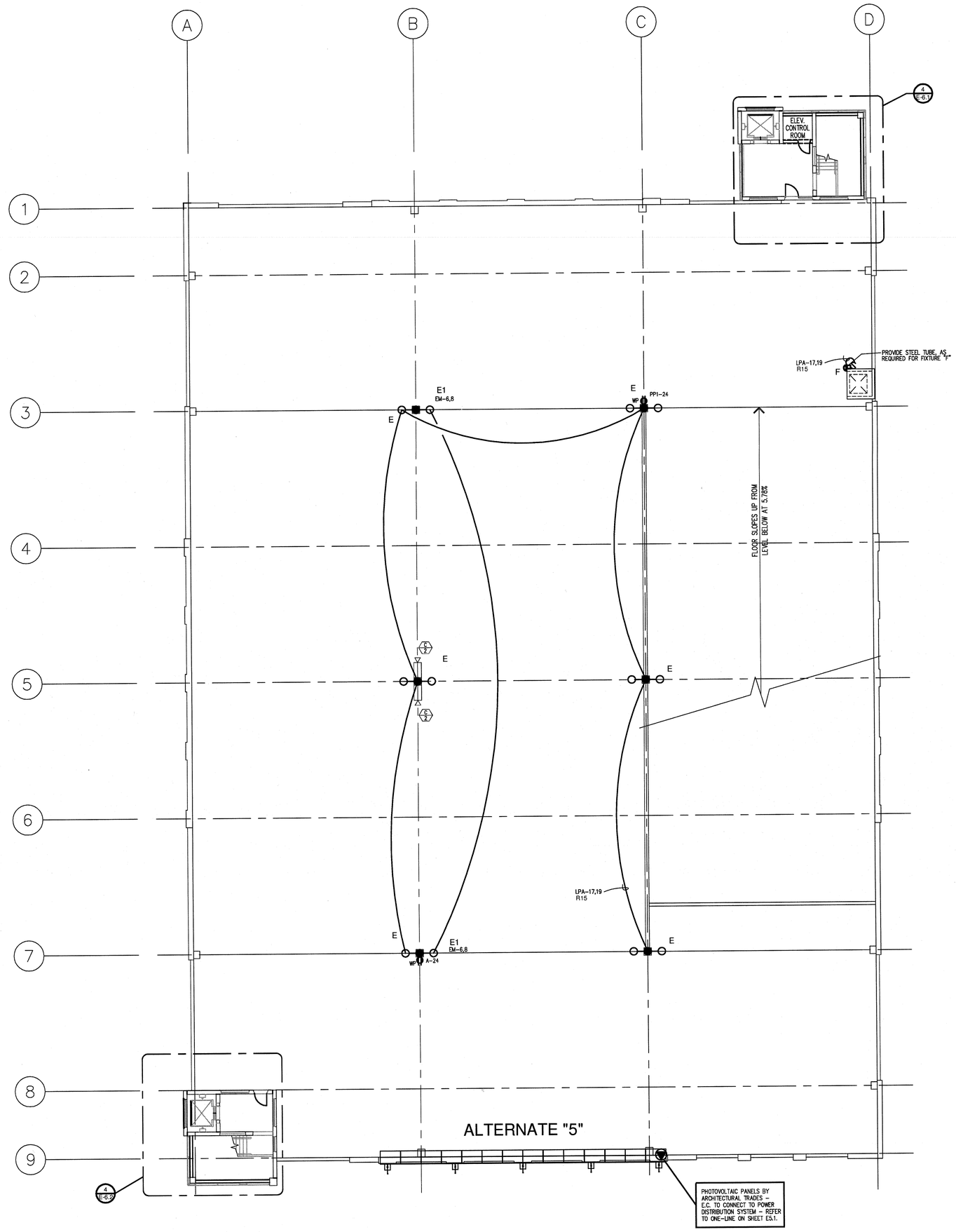

FOURTH LEVEL FLOOR PLAN – ELECTRICAL

SCALE: 1/16" = 1'-0"

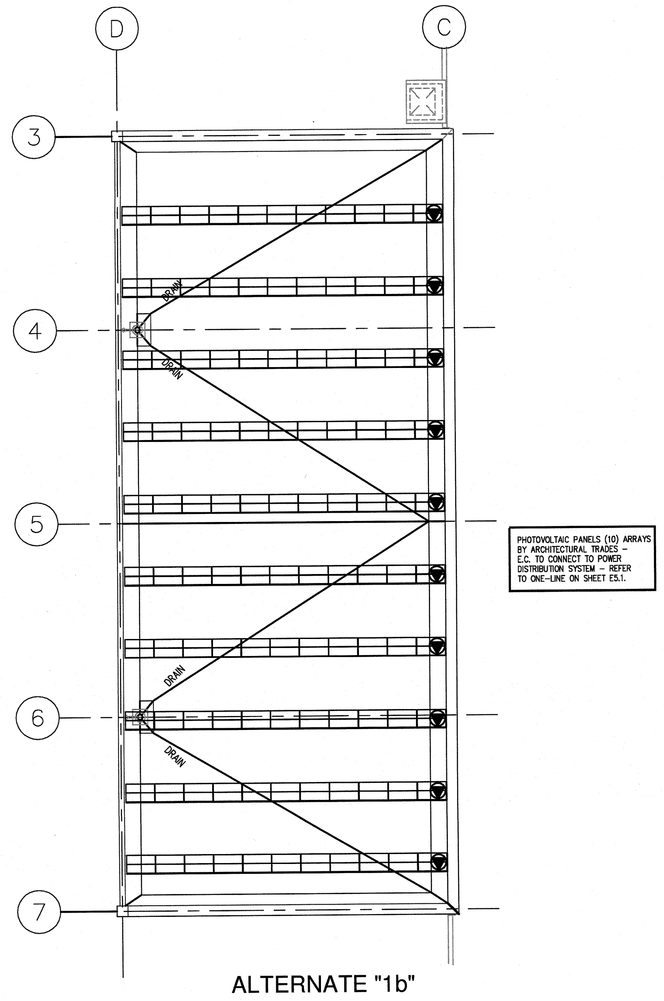

ALTERNATE "1b"

GREEN ROOF ALTERNATE FLOOR PLAN – ELECTRICAL

SCALE: 1/16" = 1'-0"

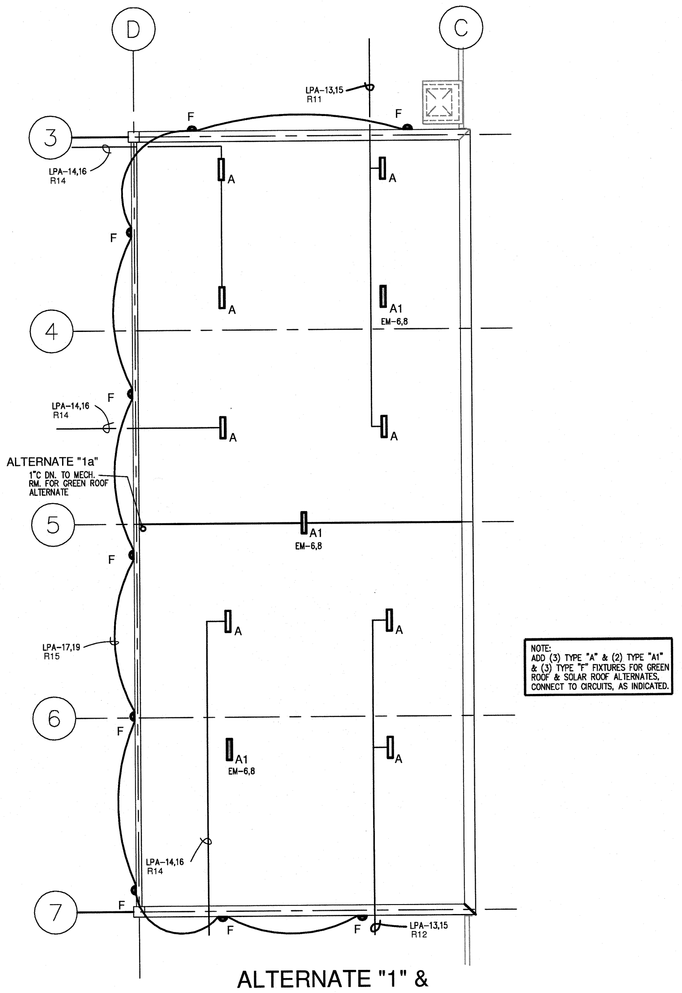

ALTERNATE "1" & ALTERNATE "1b"

GREEN ROOF ALTERNATE FLOOR PLAN – ELECTRICAL

SCALE: 1/16" = 1'-0"

GENERAL ELECTRICAL NOTES:

1. REFER TO ARCHITECTURAL REFLECTED CEILING PLAN FOR EXACT LOCATION OF ALL LIGHT FIXTURES, UNLESS OTHERWISE NOTED.
2. SEE LIGHT FIXTURE SCHEDULE, DRAWING E1.1 FOR LIGHT FIXTURE TYPES.
3. EXIT LIGHTS AND EMERGENCY BATTERY UNITS SHALL BE UNCONTROLLED AND TIED AHEAD OF LOCAL AREA LIGHTING SWITCH, UNLESS CIRCUITED OTHERWISE.
4. WHERE MORE THAN ONE LIGHT SWITCH IS INDICATED TO BE INSTALLED AT THE SAME LOCATION, THEY SHALL BE GROUPED UNDER ONE COMMON FACEPLATE.
5. ALL ELECTRICAL DEVICES SHOWN ON THIS PLAN SHALL BE NEW.
6. ANY 120 VOLT BRANCH CIRCUIT FEEDER LONGER THAN 132'-0" TO THE LAST DEVICE SHALL BE SIZED TO THE NEXT LARGER STANDARD AWG SIZE (SEE CHART). E.C SHALL FIELD VERIFY ALL LENGTHS OF FEEDERS.
7. ALL RECEPTACLES SHALL BE 20A RATED.
8. ALL DISCONNECT SWITCHES SHALL BE HEAVY DUTY TYPE.
9. ALL RECEPTACLES WITHIN 6'-0" OF SINK OR OTHER WATER SUPPLY SHALL BE GFCI TYPE RECEPTACLE.
10. REFER TO ARCHITECTURAL FLOOR PLANS AND ELEVATIONS FOR EXACT LOCATION OF DEVICES.
11. ALL JUNCTION BOXES SERVING BRANCH CIRCUIT WIRING SHALL BE LABELED WITH CIRCUITS SERVED.
12. ALL 120 VOLT CIRCUITS SHALL UTILIZE A SEPARATE NEUTRAL.
13. ALL CIRCUITS SERVING 120 VOLTS OR GREATER SHALL INCLUDE A GROUND WIRE.
14. ALL CONDUITS SHALL BE ROUTED CONCEALED UNLESS NOTED OTHERWISE.
15. ALL GENERAL EQUIPMENT MOUNTED ON THE FLOOR SHALL BE MOUNTED ON A 4" CONCRETE HOUSE KEEPING PAD.

CAMERA LEGEND

FIXED VANDAL PROOF DOME CAMERA (BY OTHERS), FED WITH 1"C. BY E.C.

COLOR PTZ DAY/NIGHT CAMERA (BY OTHERS), FED WITH 1"C. BY E.C.

EXPOSED CONDUIT SHALL BE RIGID METALLIC CONDUIT WITHIN THE PARKING AREAS OF THE STRUCTURE.

ELECTRICAL / MECHANICAL NOTE:

WHERE EXPOSED, VERTICAL ELECTRICAL CONDUIT RUNS ARE TO BE LOCATED TIGHT TO FACE OF ALL WALLS AS INDICATED ON PLANS.

HORIZONTAL ELECTRICAL CONDUIT RUNS ARE TO BE LOCATED TIGHT TO UNDERSIDE OF ALL P.C.C., C.I.P. CONC. AND/OR STEEL FRAMING MEMBERS.

ELECTRICAL CONTRACTOR TO COORDINATE WITH PRECASTER ALL REQUIRED P.C.C. PENETRATIONS FOR CONDUIT RUNS AND ATTACHMENTS.

MECHANICAL/PLUMBING TRADES TO COORDINATE WITH PRECASTER ALL REQUIRED P.C.C. PENETRATIONS AND ANCHORAGE.

UNLESS OTHERWISE NOTED, MAINTAIN 8'-0" CLEAR HEADROOM IN ALL DRIVE LANES AND PARKING STALLS TO ANY ELECT. OR MECH. FIXTURES.

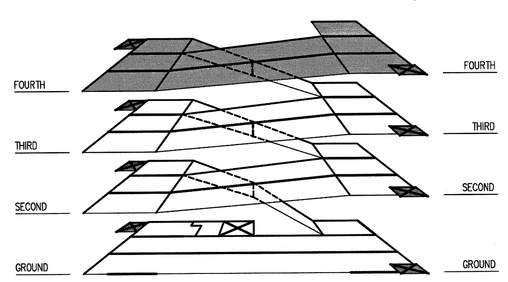

ISOMETRIC – BASE

SCALE: NONE

TYPE "E" LIGHT FIXTURE & CONCRETE BASE DETAIL

NO SCALE

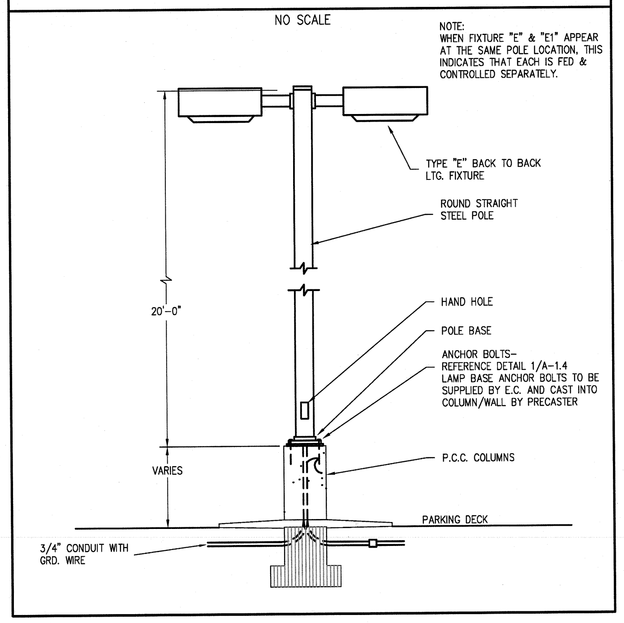

OLD TOWN PARKING DECK

TRAVERSE CITY, MICHIGAN

RICH & ASSOCIATES
Parking Consultants
Architects · Engineers
Planners
26877 Northwestern Hwy., Suite 208
Southfield, Michigan 48033
Tel: 248.353.5080
Fax: 248.353.3830
Lutz, Florida
Tel: 813.949.9860
www.RichAssoc.com

ARCHITECTS CWS
513 South Union
Traverse City, Michigan
231.946.3627 Voice231.946.1234 Fax

Bayshore engineering inc.
2040 NORTH AVE.
TRAVERSE CITY
MICHIGAN 49686
PH. (231) 941-4151
FAX (231) 941-4960

CHANGES TO PLANS AND SPECIFICATIONS

ANY CHANGE INCLUDING ALTERATION, MODIFICATION, ADDITION, DELETION OR DEVIATION BY THE OWNER, ARCHITECT, CONTRACTOR, SUB-CONTRACTOR OR ANY OTHER PARTY, WITHOUT THE WRITTEN APPROVAL OF THE ENGINEER SHALL NOT BE ACCEPTED. THE PLANS AND SPECIFICATIONS AS SUBMITTED BY THE ENGINEER, SHALL NOT BE BINDING UPON OR CONSIDERED TO BE THE WORK OF THE ENGINEER. ANY SUCH CHANGE BY THE OWNER, ARCHITECT, CONTRACTOR, SUB-CONTRACTOR OR ANY OTHER PARTY, WITHOUT THE WRITTEN APPROVAL OF THE ENGINEER SHALL NOT BE THE RESPONSIBILITY OF THE ENGINEER. THE PARTY WHO MADE THE CHANGE SHALL DEFEND, INDEMNIFY AND HOLD HARMLESS THE ENGINEER FROM ANY AND ALL LIABILITY RESULTING FROM SUCH CHANGE.

PROJECT NO.
0901–02

THESE DRAWINGS ARE THE PROPERTY OF THE ENGINEER AND ARE NOT TO BE REUSED OR REPRODUCED IN WHOLE OR IN PART, WITHOUT PERMISSION. THIS DRAWING IS COPY WRITTEN.

Date	ISSUED FOR:	By
07–02–09	DESIGN DEVELOPMENT	
08–06–09	50% CONSTRUCTION DOCUMENTS	
08–20–09	FINAL OWNER REVIEW	
09–03–09	BIDDING	
10–06–09	PERMIT	

Sheet Title:

FOURTH LEVEL FLOOR PLAN ELECTRICAL

Drawn By	LEM
Checked By	LEM
File Name	0923A–1_2
Plot Date	09–02–09

Detail Number / Detail Sheet

All matter contained hereon, including drawings, written matter, ideas or concepts, are the creation of Rich and Associates, Inc. for the specific project and shall remain the property of Rich and Associates, Inc.. No disclosure thereof in any form whatsoever shall be made to any person, firm, corporation, agency or organization, including men made without the written consent of Rich and Associates, Inc. except as required for the physical completion of the specific project.

File No	0923
Date	09–03–09
Scale	AS NOTED
Last Rev.	

Sheet Number:

E – 1.4

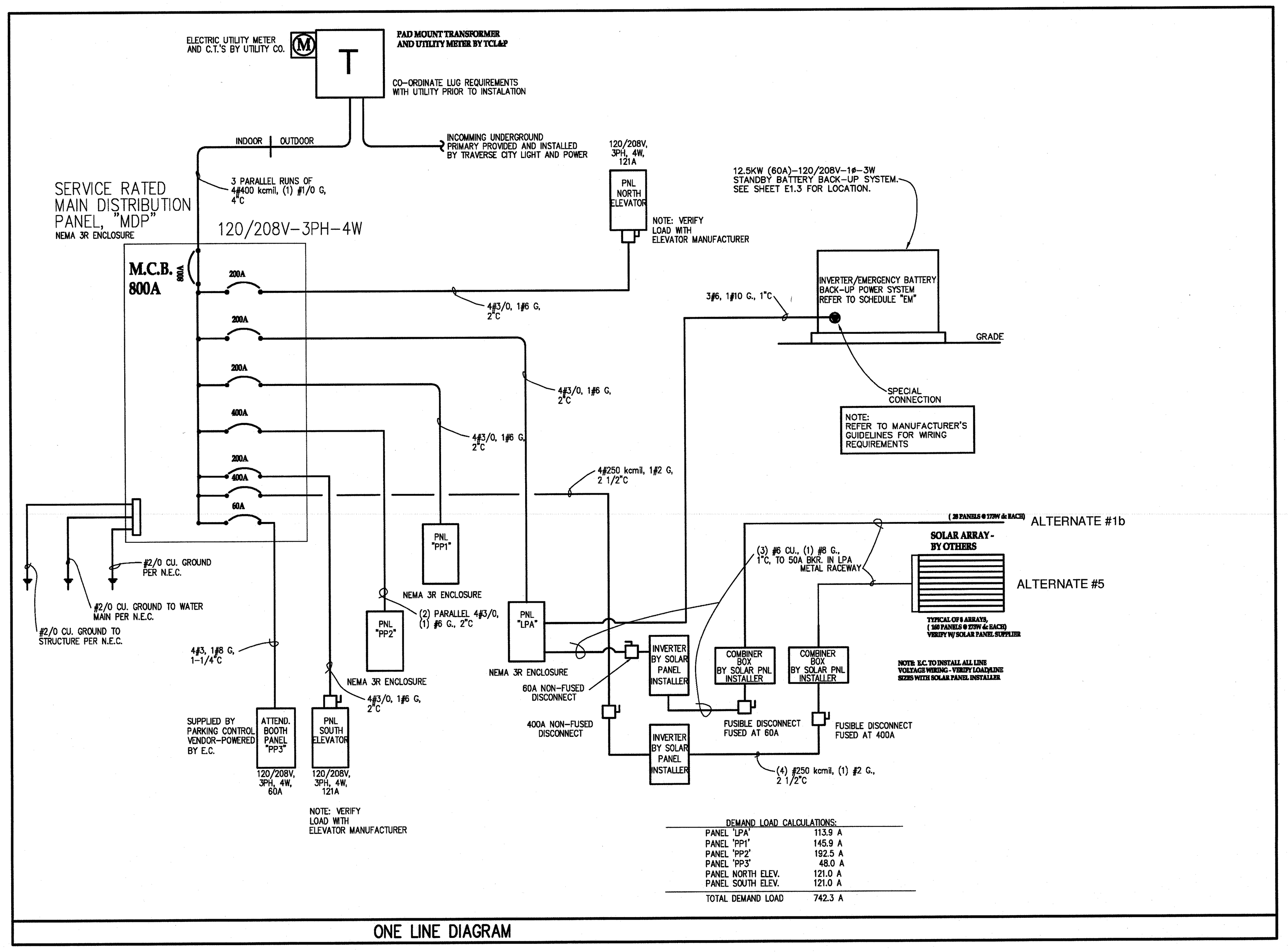

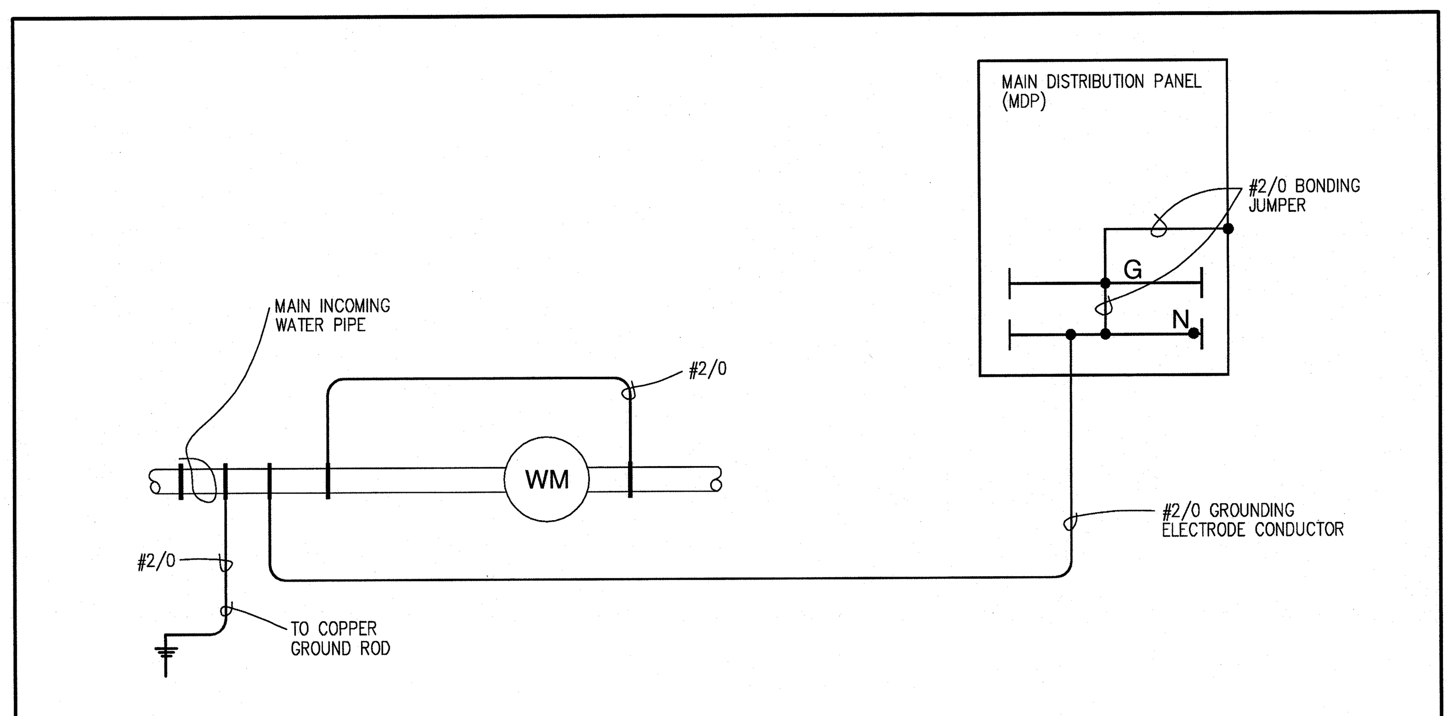

TYPICAL WATER PIPE GROUNDING

NO SCALE

EM — Emergency Battery Back-up System Circuit Breaker Schedule

Panel EM											
MAIN SIZE & TYPE:							LOCATION	GRD. FLR ELECTRICAL ROOM			
120V 208 V.	2 POLE	3 W.					FEEDER	SEE RISER DIAGRAM			
MOUNTING	FLOOR						FROM	PANEL "LPA"			
POLES/SECTIONS	6 \ 1						REMARKS				
							MIN. RMS AMPS	AIC. 22,000			

LOAD DESCRIPTION	LD TYPE	Aø	Bø	BRKR POLES & AMP	POLE NUMBER		BRKR POLES & AMP	Aø	Bø	LD TYPE	DESCRIPTION
EMERGENCY LIGHTING-FIRST FLOOR	L	1600		2/20	1	2	2/20	1200		L	EMERGENCY LIGHTING-2ND FLOOR
↓	L		1600		3	4			1200	L	↓
EMERGENCY LIGHTING-3RD FLOOR	L	1200		2/20	5	6	2/20	1100		L	EMERGENCY LIGHTING-4TH FLOOR
↓	L		1200		7	8			1100	L	↓
SPARE				1/20	9	10					SPACE
SPARE											SPACE

KVA LOAD SUMMARY		Aø	Bø	Aø	Bø	Aø	Bø		KVA LOAD SUMMARY
LIGHTING	L	2.8	2.8	5.1	5.1	2.3	2.3	L	LIGHTING
RECEPTS	R	0.0	0.0	0.0	0.0	0.0	0.0	R	RECEPTS
LARGEST MOTOR	M	0.0	0.0	0.0	0.0	0.0	0.0	M	LARGEST MOTOR
REMAINING MOTORS	M	0.0	0.0	0.0	0.0	0.0	0.0	M	REMAINING MOTORS
KITCHEN	K	0.0	0.0	0.0	0.0	0.0	0.0	K	KITCHEN
MISC PWR	P	0.0	0.0	0.0	0.0	0.0	0.0	P	MISC PWR
ELECTRIC HTG	EH	0.0	0.0	0.0	0.0	0.0	0.0	EH	ELECTRIC HTG
TOTAL CONNECTED KVA/PHASE				5.1	5.1				

Load Type	Connected KVA	Demand Factor	Demand KVA
LIGHTING	10.2	1.25	12.8
RECEPTS (10 Kvs or less)	0.0	1.00	0.0
RECEPTS (over 10 KVA)	0.0	0.50	0.0
MOTOR (LARGEST)	0.0	1.25	0.0
MOTOR (REMAINING)	0.0	1.00	0.0
KITCHEN	0.0	0.65	0.0
MISC. PWR	0.0	1.00	0.0
ELECTRIC HTG	0.0	1.00	0.0
TOTAL:	10.2		12.8

DEMAND 61.3 AMPS

Panel LPA

Panel LPA				
MAIN SIZE & TYPE:	200A MLO		LOCATION	GRD. FLR ELECTRICAL ROOM
120V 208 V.	3 PH.	4 W.	FEEDER	SEE RISER DIAGRAM
MOUNTING	SURFACE		FROM	MDP
POLES/SECTIONS	42 \ 1		REMARKS	GROUND BUS BAR. ISOLATED GROUND BUS
			MIN. RMS AMPS	AIC. 22,000

LOAD DESCRIPTION	LD TYPE	Aø	Bø	Cø	BRKR POLES & AMP	POLE NUMBER		BRKR POLES & AMP	Aø	Bø	Cø	LD TYPE	DESCRIPTION
LIGHTING-GROUND FLR PERIMETER	L	864			2/20	1	2	2/20	1412			L	LIGHTING-GROUND FLR INTERIOR
↓	L		864			3	4			1412		L	↓
LIGHTING-GROUND FLR ENCLOSED ROOMS	L			784	2/20	5	6	2/20			---	L	---
↓	L	784				7	8		---			L	↓
LIGHTING-2ND FLR PERIMETER	L		1188		2/20	9	10	2/20		1242		L	LIGHTING-2ND FLR INTERIOR
↓	L			1188		11	12				1242	L	↓
LIGHTING-3RD FLR PERIMETER	L	972			2/20	13	14	2/20	1134			L	LIGHTING-3RD FLR INTERIOR
↓	L		972			15	16			1134		L	↓
LIGHTING-4TH FLOOR	L			1250	2/20	17	18	2/20			448	L	LIGHTING-STAIR TOWERS
↓	L	1250				19	20		448			L	
EM-INVERTER BATTERY BACK-UP POWER SUPPLY	L		4600		2/60	21	22	1/20		200		L	Z-MAX PANEL
↓	L			4600		23	24	1/20			1200	L	WEST PARKING SIGN LIGHT-NORTH
SPARE		---			1/20	25	26	1/20	1200			L	SOUTH PARKING SIGN LIGHT-EAST
ELEVATOR CAB LIGHTING - S.W.			100			27	28	1/20		1200		L	SOUTH PARKING SIGN LIGHT-EAST
ELEVATOR CAB LIGHTING - N.E.				100		29	30	1/20			1200	L	WEST PARKING SIGN LIGHT-SOUTH
SOLAR ARRAY - BASE BID					2/50	31	32						SPACE
						33	34						SPACE
SPACE						35	36						SPACE
SPACE						37	38						SPACE
SPACE						39	40						SPACE
SPACE						41	42						SPACE

KVA LOAD SUMMARY		Aø	Bø	Cø	Aø	Bø	Cø	Aø	Bø	Cø		KVA LOAD SUMMARY
LIGHTING	L	3.9	7.6	7.8	8.1	12.8	11.9	4.2	5.2	4.1	L	LIGHTING
RECEPTS	R	0.0	0.0	0.0	0.0	0.0	0.0	0.0	0.0	0.0	R	RECEPTS
LARGEST MOTOR	M	0.0	0.0	0.0	0.0	0.0	0.0	0.0	0.0	0.0	M	LARGEST MOTOR
REMAINING MOTORS	M	0.0	0.0	0.0	0.0	0.0	0.0	0.0	0.0	0.0	M	REMAINING MOTORS
KITCHEN	K	0.0	0.0	0.0	0.0	0.0	0.0	0.0	0.0	0.0	K	KITCHEN
MISC PWR	P	0.0	0.0	0.0	0.0	0.0	0.0	0.0	0.0	0.0	P	MISC PWR
ELECTRIC HTG	EH	0.0	0.0	0.0	0.0	0.0	0.0	0.0	0.0	0.0	EH	ELECTRIC HTG
TOTAL CONNECTED KVA/PHASE					8.1	12.8	11.9					

Load Type	Connected KVA	Demand Factor	Demand KVA
LIGHTING	32.8	1.25	41.0
RECEPTS (10 Kvs or less)	0.0	1.00	0.0
RECEPTS (over 10 KVA)	0.0	0.50	0.0
MOTOR (LARGEST)	0.0	1.25	0.0
MOTOR (REMAINING)	0.0	1.00	0.0
KITCHEN	1.0	0.65	0.0
MISC. PWR	0.0	1.00	0.0
ELECTRIC HTG	0.0	1.00	0.0
TOTAL:	32.8		41.0

LOCK ON BREAKER
SHUNT TRIP
GF1

DEMAND 113.9 AMPS

Panel PP1

Panel PP1				
MAIN SIZE & TYPE:	200A MLO		LOCATION	GRD. FLR ELECTRICAL ROOM
120V 208 V.	3 PH.	4 W.	FEEDER	SEE RISER DIAGRAM
MOUNTING	SURFACE		FROM	MDP
POLES/SECTIONS	42 \ 1		REMARKS	GROUND BUS BAR. ISOLATED GROUND BUS
			MIN. RMS AMPS	AIC. 22,000

LOAD DESCRIPTION	LD TYPE	Aø	Bø	Cø	BRKR POLES & AMP	POLE NUMBER		BRKR POLES & AMP	Aø	Bø	Cø	LD TYPE	DESCRIPTION
SHELBY PAY BY SPACE METER-NW	R	1000			1/20	1	2	1/30	3600			P	ETWH-1, ELEC. TANKLESS WATER HTR.
SHELBY PAY BY SPACE METER-SW	R		1000		1/20	3	4	1/30		3600		P	ETWH-1, ELEC. TANKLESS WATER HTR.
EWH-1, ELECTRIC WALL HEATER	EH			1000	2/20	5	6	2/20			950	P	EHD-1, ELECTRIC HAND DRYER
↓	EH	1000				7	8		950			P	↓
EWH-1, ELECTRIC WALL HEATER	EH		1000		2/20	9	10	2/20		950		P	EHD-1, ELECTRIC HAND DRYER
↓	EH			1000		11	12				950	P	↓
EUH-1, ELECTRIC UNIT HEATER	EH	3750			2/40	13	14	3/20	830			M	BP-1, WATER BOOSTER PUMP DUAL PUMP, SINGLE OPERATION
↓	EH		3750			15	16			830		M	
EUH-2, ELECTRIC UNIT HEATER	EH			2500	2/30	17	18				830	M	↓
↓	EH	2500				19	20	1/20	1000			R	I.G. IRRIGATION CONTROL PANEL
EUH-3, ELECTRIC UNIT HEATER	EH		1150		2/20	21	22	1/20		1000		R	I.G. GREEN ROOF IRR. CONRL. PNL
↓	EH			1150		23	24	1/20			1440	R	RECEPTACLES
PTAC-2, PTAC UNIT	M	2130			2/30	25	26	1/20	1000			R	I.G. PARKING CONTROL PANEL
↓	M		2130			27	28	1/20		1080		R	RECEPTACLES
* WH-1, ELECTRIC WATER HEATER	P			2000	2/20	29	30	1/20			1440	R	RECEPTACLES
↓	P	2000				31	32	1/20	180			R	ELEVATOR PIT RECEPTACLE - S.W.
SPACE						33	34	1/20		180		R	ELEVATOR PIT RECEPTACLE - N.W.
LIGHT & EF-1 IN ELEV. EQ. RM.	L			250	1/20	35	36	1/20					SPARE
SPACE						37	38						SPACE
SPACE						39	40						SPACE
SPACE						41	42						SPACE

KVA LOAD SUMMARY		Aø	Bø	Cø	Aø	Bø	Cø	Aø	Bø	Cø		KVA LOAD SUMMARY
LIGHTING	L	0.0	0.0	0.3	0.0	0.0	0.3	0.0	0.0	0.0	L	LIGHTING
RECEPTS	R	1.0	1.0	0.0	3.2	3.3	2.9	2.2	2.3	2.9	R	RECEPTS
LARGEST MOTOR	M	2.1	2.1	0.0	2.1	2.1	0.0	0.0	0.0	0.0	M	LARGEST MOTOR
REMAINING MOTORS	M	0.0	0.0	0.0	0.8	0.8	0.8	0.8	0.8	0.8	M	REMAINING MOTORS
KITCHEN	K	0.0	0.0	0.0	0.0	0.0	0.0	0.0	0.0	0.0	K	KITCHEN
MISC PWR	P	2.0	2.0	2.0	6.6	6.6	3.9	4.6	4.6	1.9	P	MISC PWR
ELECTRIC HTG	EH	7.3	5.9	4.7	7.3	5.9	4.7	0.0	0.0	0.0	EH	ELECTRIC HTG
TOTAL CONNECTED KVA/PHASE					20.0	18.7	12.6					

Load Type	Connected KVA	Demand Factor	Demand KVA
LIGHTING	0.3	1.25	0.4
RECEPTS (10 Kvs or less)	9.4	1.00	9.4
RECEPTS (over 10 KVA)	0.0	0.50	0.0
MOTOR (LARGEST)	4.2	1.25	5.3
MOTOR (REMAINING)	2.4	1.00	2.4
KITCHEN	0.0	0.65	0.0
MISC. PWR	17.1	1.00	17.1
ELECTRIC HTG	17.9	1.00	17.9
TOTAL:	51.3		52.5

LOCK ON BREAKER
SHUNT TRIP
GF1

DEMAND 145.9 AMPS

* VERIFY BREAKER SIZE W/ M.C.

Panel PP2

Panel PP2				
MAIN SIZE & TYPE:	400A MLO		LOCATION	GRD. FLR ELECTRICAL ROOM
120V 208 V.	3 PH.	4 W.	FEEDER	SEE RISER DIAGRAM
MOUNTING	SURFACE		FROM	MDP
POLES/SECTIONS	42 \ 1		REMARKS	GROUND BUS BAR. ISOLATED GROUND BUS
			MIN. RMS AMPS	AIC. 22,000

LOAD DESCRIPTION	LD TYPE	Aø	Bø	Cø	BRKR POLES & AMP	POLE NUMBER		BRKR POLES & AMP	Aø	Bø	Cø	LD TYPE	DESCRIPTION
ELEC. VEHICLE CHARGING STATION	R	3328			2/20	1	2	2/20	3328			R	ELEC. VEHICLE CHARGING STATION
↓	R		3328			3	4			3328		R	↓
ELEC. VEHICLE CHARGING STATION	R			3328	2/20	5	6	2/20			3328	R	ELEC. VEHICLE CHARGING STATION
↓	R	3328				7	8		3328			R	↓
ELEC. VEHICLE CHARGING STATION	R		3328		2/20	9	10	1/20		1000		M	BOILER B-1
↓	R					11	12	1/20			1000	M	BOILER B-1, POWER VENT EXHAUSTER
BOILER B-1, PUMP(S)	M	1950			3/20	13	14	1/20	1000			M	BOILER B-2
	M		1950			15	16	1/20		1000		M	BOILER B-2, POWER VENT EXHAUSTER
↓	M			1950		17	18	1/20			1000	M	BOILER B-3
BOILER B-2 & B-3, PUMP(S)	M	2900			3/30	19	20	1/20	1000			M	BOILER B-3, POWER VENT EXHAUSTER
	M		2900			21	22	1/20		---			SPARE
↓	M			2900		23	24	2/50			3190	EH	SNOWMELT, NORTHEAST AREA
SNOWMELT, SOUTHWEST AREA	EH	2820			2/50	25	26		3190			EH	
↓	EH		2820			27	28	2/30		2500		EH	IN-FLOOR HEAT, NORTHEAST AREA
HANDI-CAP DOOR OPENERS - N.E.	R			600	1/20	29	30				2500	EH	↓
HANDI-CAP DOOR OPENERS - S.W.	R	600			1/20	31	32	2/30	1250			EH	IN-FLOOR HEAT, SOUTHEAST AREA
SPARE					1/20	33	34			1250		EH	↓
SPACE						35	36	2/30			2130	M	PTAC-1, SOUTHWEST ELEV. EQ. RM.
SPACE						37	38		2130			M	↓
SPACE						39	40	2/30		2130		M	PTAC-1, NORHTEAST ELEV. EQ. RM.
SPACE						41	42				2130	M	↓

KVA LOAD SUMMARY		Aø	Bø	Cø	Aø	Bø	Cø	Aø	Bø	Cø		KVA LOAD SUMMARY
LIGHTING	L	0.0	0.0	0.0	0.0	0.0	0.0	0.0	0.0	0.0	L	LIGHTING
RECEPTS	R	7.3	6.7	3.9	14.0	10.0	7.2	6.7	3.3	3.3	R	RECEPTS
LARGEST MOTOR	M	2.9	2.9	2.9	2.9	2.9	2.9	0.0	0.0	0.0	M	LARGEST MOTOR
REMAINING MOTORS	M	2.0	2.0	2.0	6.1	6.1	6.1	4.1	4.1	4.1	M	REMAINING MOTORS
KITCHEN	K	0.0	0.0	0.0	0.0	0.0	0.0	0.0	0.0	0.0	K	KITCHEN
MISC PWR	P	0.0	0.0	0.0	0.0	0.0	0.0	0.0	0.0	0.0	P	MISC PWR
ELECTRIC HTG	EH	2.8	2.8	0.0	7.2	6.6	5.7	4.4	3.8	5.7	EH	ELECTRIC HTG
TOTAL CONNECTED KVA/PHASE					30.2	25.6	21.9					

Load Type	Connected KVA	Demand Factor	Demand KVA
LIGHTING	0.0	1.25	0.0
RECEPTS (10 Kvs or less)	10.0	1.00	10.0
RECEPTS (over 10 KVA)	21.2	0.50	10.6
MOTOR (LARGEST)	8.7	1.25	10.9
MOTOR (REMAINING)	18.3	1.00	18.3
KITCHEN	0.0	0.65	0.0
MISC. PWR	0.0	1.00	0.0
ELECTRIC HTG	19.5	1.00	19.5
TOTAL:	77.7		69.3

LOCK ON BREAKER
SHUNT TRIP
GF1

DEMAND 192.5 AMPS

SYMBOL KEY

- △ TWO POWER CONDUCTORS AND DATA CABLE. SEE PRODUCT DATA SHEETS FOR TYPE AND SIZE.
- ○ CLASS 1 WIRING 2 CONDUCTORS.
- ● CLASS 1 WIRING 3 CONDUCTORS.
- □ CLASS 1 WIRING UNIT FEED.
- ■ #18 AVG MINIMUM CLASS 2 WIRING. SEE INPUT SCHEDULE FOR QTY OF CONDUCTORS.
- ◆ #18 AVG MINIMUM CLASS 2 WIRING 3 CONDUCTORS PER DEVICE.
- ▲ CAT 5 OR CAT 5E NETWORK CABLE.

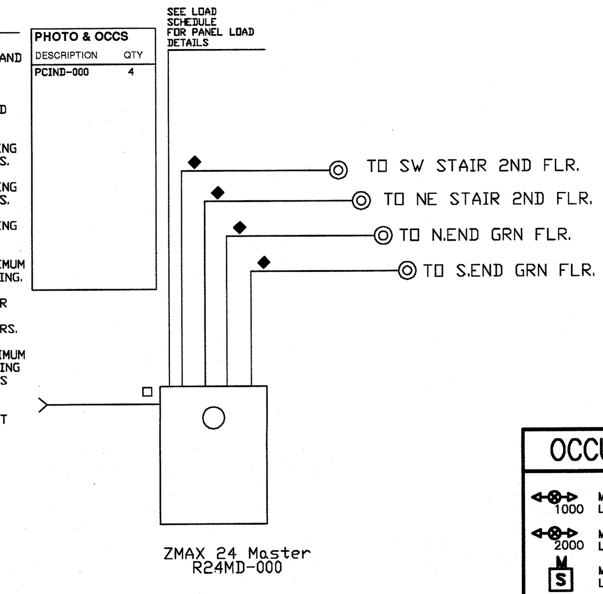

OCCUPANCY SENSOR SCHEDULE

Symbol	Description
1000	MULTI-TECH CEILING MOUNT OCCUPANCY SENSOR, 360 DEGREE, 1000SF LEVITON OSC10-M0W
2000	MULTI-TECH CEILING MOUNT OCCUPANCY SENSOR, 360 DEGREE, 2000SF LEVITON OSC20-M0W
S M	MULTI-TECH WALL BOX MOUNT OCCUPANCY SENSOR, 180 DEGREE, 500SF LEVITON OSSMT-MDW
◇	RELAY POWER PACK, 20AMP 120/277V LEVITON OSP20-0D0

Z-MAX 24 Master CABINET CIRCUIT SCHEDULE

120VAC, 1 PHASE

PANEL LOCATION: ELECTRICAL ROOM
PANEL DESCRIPTION: 24 Relay Cabinet: Master CH - 120 277 and 347V - No Relays
CATALOG NUMBER: R24MD-000
PANEL FEED: LPA-22
PANEL ID: Z-MAX 24 Master
MOUNTING: Surface

RELAY NO.	TYPE	EM	LUMANET CHANNEL	VAC	LOAD W/VA	CIRCUIT DESCRIPTION	FIXTURE TYPE	RELAY NO.	TYPE	EM	LUMANET CHANNEL	VAC	LOAD W/VA	CIRCUIT DESCRIPTION	FIXTURE TYPE
R1	2L	N	----	208V		NEND GRN FLR. A		R2	2L	N	----	208V		V. GRN FLR. A	
R3	2L	N	----	208V		E. GRN FLR. A		R4	2L	N	----	208V		S.END GRN FLR. A	
R5	2L	N	----	208V		GRN FLR.ENTRANCE		R6	2L	N	----	208V		PARKING SIGNAGE	
R7	2L	N	----	208V		NEND 2ND FLR. A		R8	2L	N	----	208V		V. 2ND FLR. A	
R9	2L	N	----	208V		E. 2ND FLR. A		R10	2L	N	----	208V		S.END 2ND FLR. A	
R11	2L	N	----	208V		NEND 3RD FLR. A		R12	2L	N	----	208V		V. 3RD FLR. A	
R13	2L	N	----	208V		E. 3RD FLR. A		R14	2L	N	----	208V		S.END 3RD FLR. A	
R15	2L	N	----	208V		4TH FLR. SITE		R16	2L	N	----	208V		STAIR/ELEVATOR	
VOLTAGE BARRIER															
R17	2L	Y	----	208V		EXTERIOR LTS GND FLR ON EM CIR		R18	2L	N	----	208V		SPARE	
	----	N		---					----	N		---			
	----	N		---					----	N		---			
	----	N							----	N					

RELAY QTY: 0 S = RELAY-ST2; Z-MAX RELAY CARD, 20A, UP TO 277VAC
0 2 = RELAY-002-2PL; Z-MAX RELAY CARD, 2-POLE, 20A, UP TO 480VAC
0 3 = RELAY-003-347; Z-MAX RELAY CARD, 20A, UP TO 347VAC
18 2L = RELAY-2NC; Z-MAX 2POLENC RELAY CARD, 20A, UP TO 480VAC

OLD TOWN PARKING DECK

TRAVERSE CITY, MICHIGAN

RICH & ASSOCIATES
Parking Consultants
Architects · Engineers
Planners
26877 Northwestern Hwy., Suite 208
Southfield, Michigan 48033
Tel: 248.353.5080
Fax: 248.353.3830
Lutz, Florida
Tel: 813.949.9860
www.RichAssoc.com

ARCHITECTS CWS
513 South Union
Traverse City, Michigan
231.946.3627 Voice231.946.1234 Fax

CHANGES TO PLANS AND SPECIFICATIONS

ANY CHANGE INCLUDING ALTERATION, MODIFICATION, ADDITION, DELETION OR DEVIATION BY THE OWNER, ARCHITECT, CONTRACTOR, SUB-CONTRACTOR OR ANY OTHER PARTY OF ANY OF THE CONTRACT DOCUMENTS INCLUDING, BUT NOT LIMITED TO, THE PLANS AND SPECIFICATIONS AS SUBMITTED BY THE ENGINEER, SHALL NOT BE BINDING UPON OR CONSIDERED TO BE THE WORK OF THE ENGINEER. ANY SUCH CHANGE BY THE OWNER, ARCHITECT, CONTRACTOR, SUB-CONTRACTOR, OR ANY OTHER PARTY, WITHOUT THE WRITTEN APPROVAL OF THE ENGINEER SHALL NOT BE THE RESPONSIBILITY OF THE ENGINEER. THE PARTY WHO MADE THE CHANGE SHALL DEFEND, INDEMNIFY AND HOLD HARMLESS THE ENGINEER FROM ANY AND ALL LIABILITY RESULTING FROM SUCH CHANGE.

Bayshore engineering inc.
2048 NORTH AVE.
TRAVERSE CITY
MICHIGAN 49686
PH. (231) 941-4151
FAX (231) 941-4960

PROJECT NO. 0901-02

THESE DRAWINGS ARE THE PROPERTY OF THE ENGINEER AND ARE NOT TO BE REUSED OR REPRODUCED WITHOUT HIS WRITTEN PERMISSION. THIS DRAWING IS COPY WRITTEN.

Date	ISSUED FOR:	By
07-02-09	DESIGN DEVELOPMENT	
08-06-09	50% CONSTRUCTION DOCUMENTS	
08-20-09	FINAL OWNER REVIEW	
09-03-09	BIDDING	
10-06-09	PERMIT	

Sheet Title:

ELECTRICAL - SCHEDULES/ ONE-LINE DIAGRAM/DETAILS

Drawn By	LEM
Checked By	LEM
File Name	0923A-1_2
Plot Date	09-02-09

Detail Number / Detail Sheet

All matter contained hereon, including drawings, written matter, ideas or concepts, are the creation of Rich and Associates, Inc. for the specific project and shall remain the property of Rich and Associates, Inc.. No disclosure thereof in any form whatsoever shall be made to any person, firm, corporation, agency or organization, including news media without the written consent of Rich and Associates, Inc. except as required for the physical completion of the specific project.

File No	0923
Date	09-03-09
Scale	AS NOTED
Last Rev.	

NORTH

Sheet Number:

E - 5.1

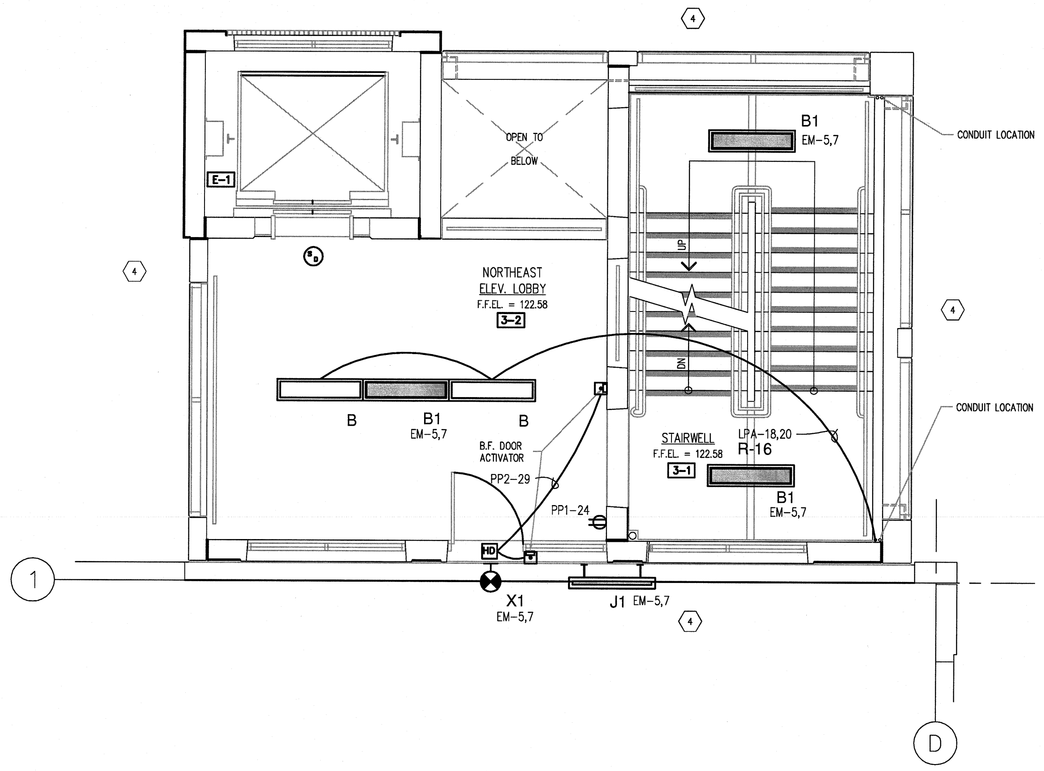

NORTHEAST STAIR/ELEVATOR TOWER THIRD LEVEL PLAN – ELECTRICAL

SCALE: 1/4" = 1'-0"

3 / E-6.1

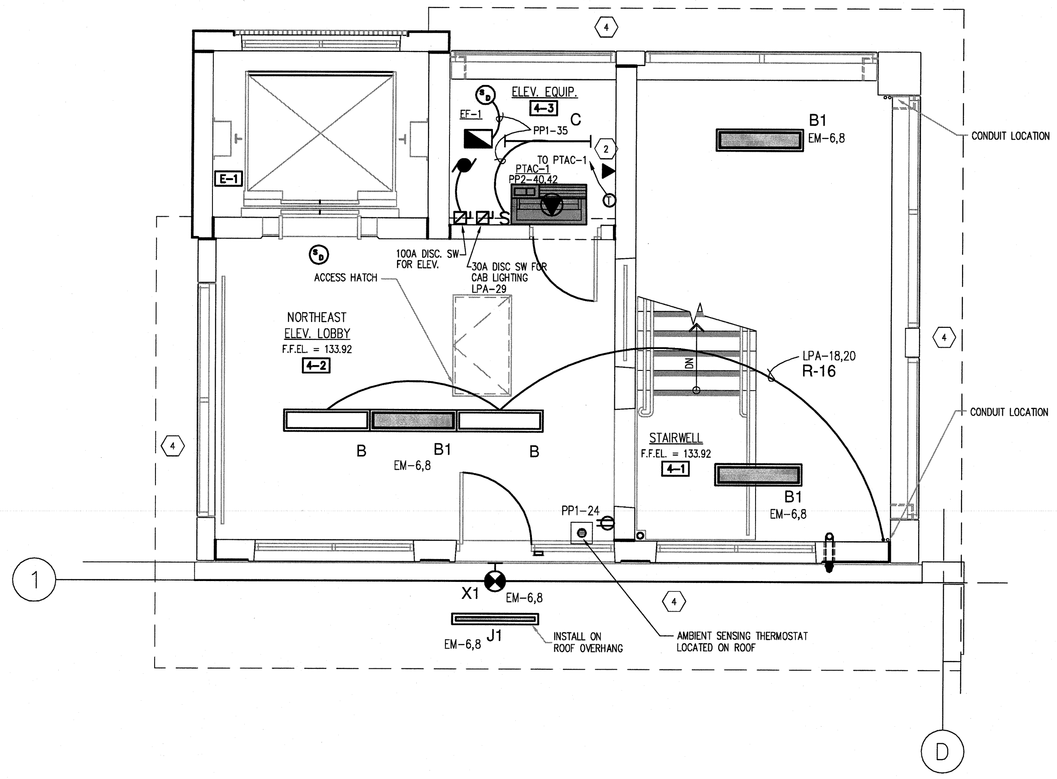

NORTHEAST STAIR/ELEVATOR TOWER FOURTH LEVEL PLAN – ELECTRICAL

SCALE: 1/4" = 1'-0"

4 / E-6.1

GENERAL ELECTRICAL NOTES:

1. REFER TO ARCHITECTURAL REFLECTED CEILING PLAN FOR EXACT LOCATION OF ALL LIGHT FIXTURES, UNLESS OTHERWISE NOTED.
2. SEE LIGHT FIXTURE SCHEDULE, DRAWING E1.1 FOR LIGHT FIXTURE TYPES.
3. EXIT LIGHTS AND EMERGENCY BATTERY UNITS SHALL BE UNCONTROLLED AND TIED AHEAD OF LOCAL AREA LIGHTING SWITCH, UNLESS CIRCUITED OTHERWISE.
4. WHERE MORE THAN ONE LIGHT SWITCH IS INDICATED TO BE INSTALLED AT THE SAME LOCATION, THEY SHALL BE GROUPED UNDER ONE COMMON FACEPLATE.
5. ALL ELECTRICAL DEVICES SHOWN ON THIS PLAN SHALL BE NEW.
6. ANY 120 VOLT BRANCH CIRCUIT FEEDER LONGER THAN 120'-0" TO THE LAST DEVICE SHALL BE SIZED TO THE NEXT LARGER STANDARD AWG SIZE (SEE CHART). E.C SHALL FIELD VERIFY ALL LENGTHS OF FEEDERS.
7. ALL RECEPTACLES SHALL BE 20A RATED.
8. ALL DISCONNECT SWITCHES SHALL BE HEAVY DUTY TYPE.
9. ALL RECEPTACLES WITHIN 6'-0" OF SINK OR OTHER WATER SUPPLY SHALL BE GFCI TYPE RECEPTACLE.
10. REFER TO ARCHITECTURAL FLOOR PLANS AND ELEVATIONS FOR EXACT LOCATION OF DEVICES.
11. ALL JUNCTION BOXES SERVING BRANCH CIRCUIT WIRING SHALL BE LABELED WITH CIRCUITS SERVED.
12. ALL 120 VOLT CIRCUITS SHALL UTILIZE A SEPARATE NEUTRAL.
13. ALL CIRCUITS SERVING 120 VOLTS OR GREATER SHALL INCLUDE A GROUND WIRE.
14. ALL CONDUITS SHALL BE ROUTED CONCEALED UNLESS NOTED OTHERWISE.
15. ALL GENERAL EQUIPMENT MOUNTED ON THE FLOOR SHALL BE MOUNTED ON A 4" CONCRETE HOUSE KEEPING PAD.

CAMERA LEGEND

(C) FIXED VANDAL PROOF CAMERA (BY OTHERS). FED WITH 1"C, BY E.C.. BOTTOM NUMBER DENOTES CAMERA NUMBER.

ELECTRICAL KEYED NOTES

1. CARD READER BY OWNER, E.C. TO PROVIDE BACK BOX AND 3/4"C TO TO CARD READER CONTROL BOX IN ELECTRICAL ROOM.
2. ELEVATOR TELEPHONE SHALL BE ROUTED BACK TO SECURITY PANEL IN ELECTRICAL ROOM.
3. CAMERA BY OWNER, E.C. TO PROVIDE BACK BOX AS REQUIRED AND 1"C TO SECURITY SYSTEM IN ELECTRICAL ROOM.
4. THERE WILL BE NO EXPOSED CONDUIT ANYWHERE ON THE OUTSIDE OF THE STAIR TOWER.

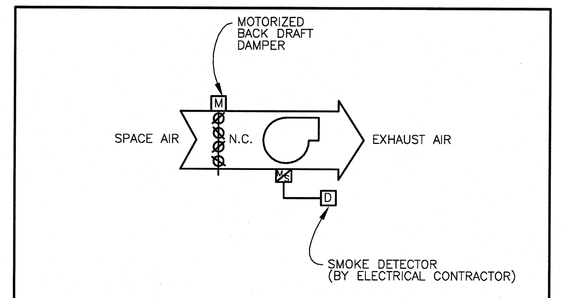

EXHAUST FAN CONTROL DIAGRAM (EF-1)

NOT TO SCALE

EXHAUST FAN SEQUENCE OF OPERATION
GENERAL: THE EXHAUST FAN SHALL BE CONTROLLED BY SMOKE DETECTOR.

IF SMOKE IS DETECTED IN THE SPACE, THE MOTORIZED DAMPER SHALL FULLY OPEN AND THE EXHAUST FAN SAHLL ENERGIZE AND RUN CONTINUOUSLY.

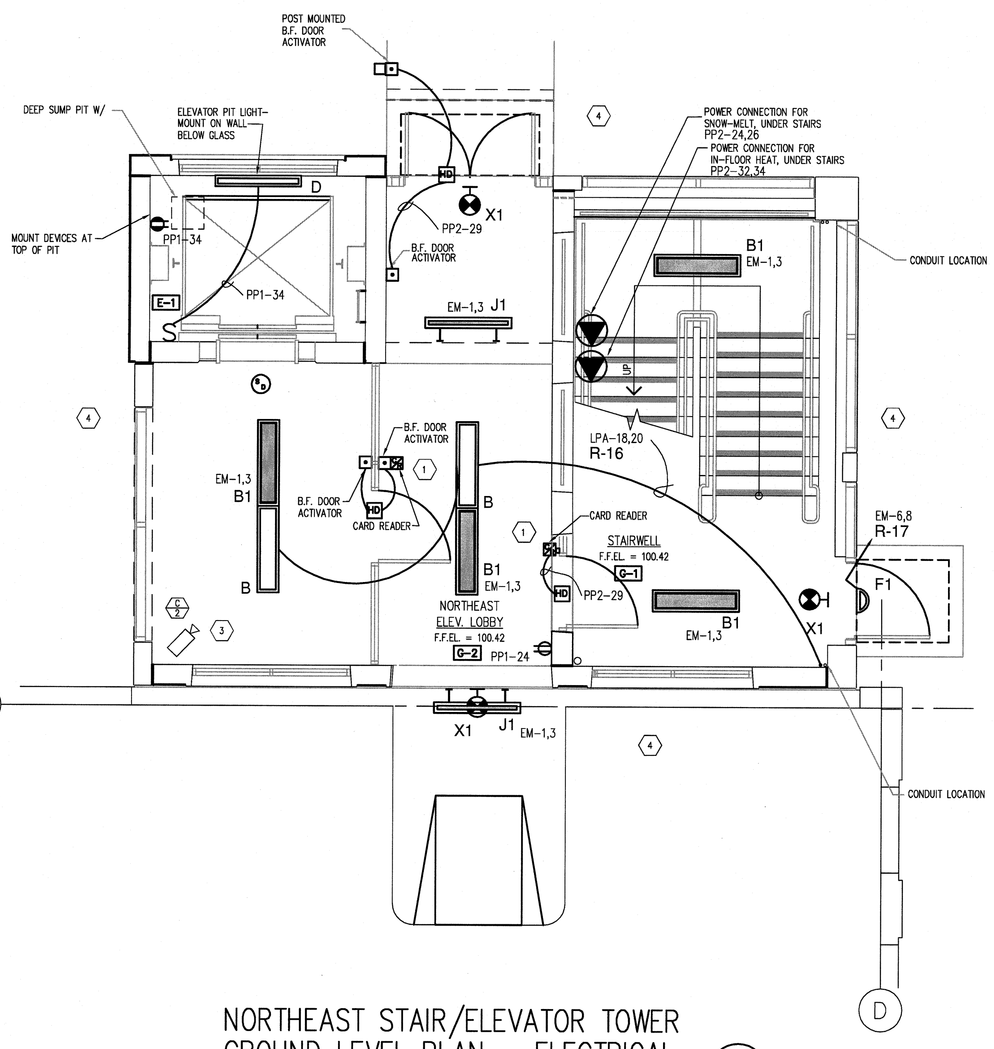

NORTHEAST STAIR/ELEVATOR TOWER GROUND LEVEL PLAN – ELECTRICAL

SCALE: 1/4" = 1'-0"

1 / E-6.1

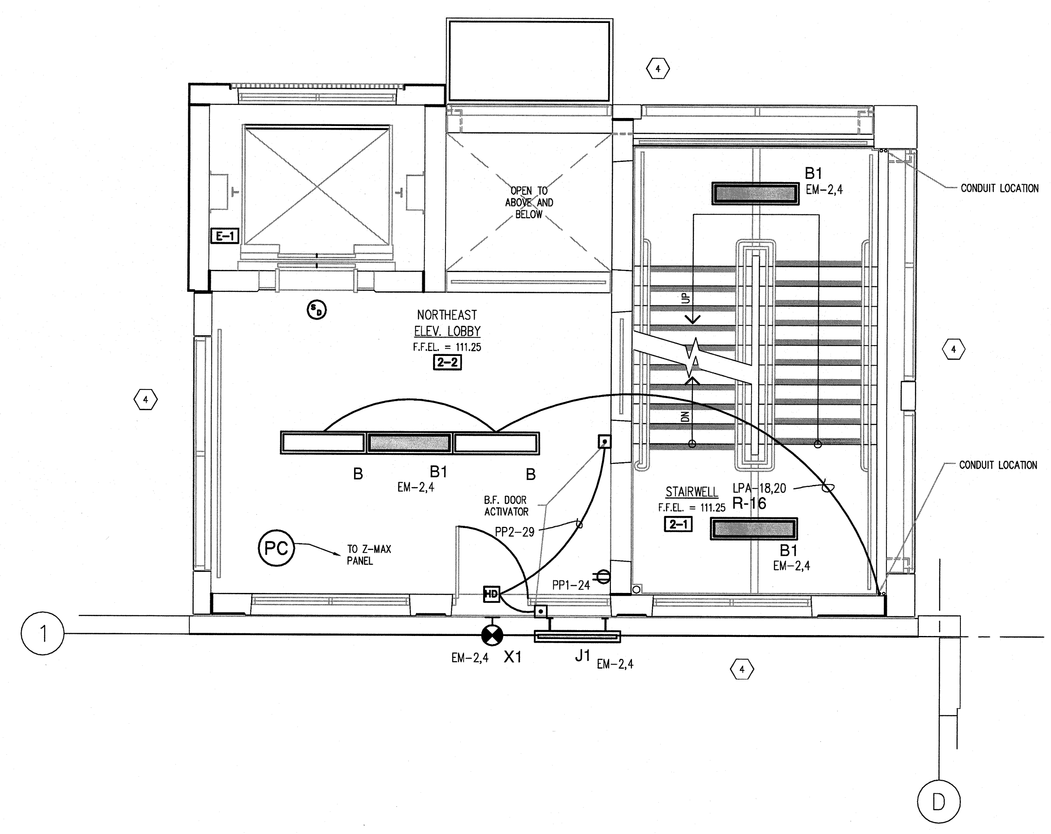

NORTHEAST STAIR/ELEVATOR TOWER SECOND LEVEL PLAN – ELECTRICAL

SCALE: 1/4" = 1'-0"

2 / E-6.1

ELECTRICAL / MECHANICAL NOTE:

WHERE EXPOSED, VERTICAL ELECTRICAL CONDUIT RUNS ARE TO BE LOCATED TIGHT TO FACE OF ALL WALLS AS INDICATED ON PLANS.

HORIZONTAL ELECTRICAL CONDUIT RUNS ARE TO BE LOCATED TIGHT TO UNDERSIDE OF ALL P.C.C., C.I.P. CONC. AND/OR STEEL FRAMING MEMBERS.

ELECTRICAL CONTRACTOR TO COORDINATE WITH PRECASTER ALL REQUIRED P.C.C. PENETRATIONS FOR CONDUIT RUNS AND ATTACHMENTS.

MECHANICAL/PLUMBING TRADES TO COORDINATE WITH PRECASTER ALL REQUIRED P.C.C. PENETRATIONS AND ANCHORAGE.

UNLESS OTHERWISE NOTED, MAINTAIN 8'-2" CLEAR HEADROOM IN ALL DRIVE LANES AND PARKING STALLS TO ANY ELECT. OR MECH. FIXTURES.

WIRE SIZE REQUIREMENTS

NOTE:
BASED ON A MAXIMUM VOLTAGE DROP OF 3% ON 120V CIRCUITS –
WIRES FOR RUNS OVER 130'-0" OR FOR VOLTAGES GREATER THAN 120V, SHALL BE DETERMINED ON A MAXIMUM VOLTAGE DROP OF 3%, PER ASHRAE 90.1-2004, SECTION 8.4.1.2.

BRANCH CIRCUIT AMPS	LENGTH OF RUN – FROM PANEL TO FIRST CONNECTION – FEET								
AMPS	50'	60'	70'	80'	90'	100'	110'	120'	130'
15	#12	#12	#12	#10	#10	#10	#10	#8	#8
20	#12	#10	#10	#10	#8	#8	#8	#8	#8
30	#10	#8	#8	#8	#6	#6	#6	#6	#6

OLD TOWN PARKING DECK

TRAVERSE CITY, MICHIGAN

RICH & ASSOCIATES
Parking Consultants
Architects · Engineers
Planners
26877 Northwestern Hwy., Suite 208
Southfield, Michigan 48033
Tel: 248.353.5080
Fax: 248.353.3830
Lutz, Florida
Tel: 813.949.9860
www.RichAssoc.com

ARCHITECTS CWS
513 South Union
Traverse City, Michigan
231.946.3627 Voice231.946.1234 Fax

Bayshore engineering inc.
2048 NORTH AVE.
TRAVERSE CITY
MICHIGAN 49686
PH. (231) 941-4151
FAX (231) 941-4960

CHANGES TO PLANS AND SPECIFICATIONS

ANY CHANGE INCLUDING ALTERATION, MODIFICATION, ADDITION, DELETION OR DEVIATION BY THE OWNER, ARCHITECT, CONTRACTOR, SUB-CONTRACTOR OR ANY OTHER PARTY OF ANY OF THE CONTRACT DOCUMENTS INCLUDING, BUT NOT LIMITED TO, THE PLANS AND SPECIFICATIONS AS SUBMITTED BY THE ENGINEER, SHALL NOT BE BINDING UPON OR CONSIDERED TO BE THE WORK OF THE ENGINEER. ANY SUCH CHANGE BY THE OWNER, ARCHITECT, CONTRACTOR, SUB-CONTRACTOR OR ANY OTHER PARTY OTHER THAN THE ENGINEER OF RICH AND ASSOCIATES, INC. IS THE RESPONSIBILITY OF THE ENGINEER. THE ENGINEER OF RICH AND ASSOCIATES, INC. SHALL DEFEND, INDEMNIFY AND HOLD HARMLESS THE ENGINEER FROM ANY AND ALL LIABILITY RESULTING FROM SUCH CHANGE.

PROJECT NO.	
0901-02	THESE DRAWINGS ARE THE PROPERTY OF THE ENGINEER AND MAY NOT TO BE REVISED OR REPRODUCED WITHOUT HIS WRITTEN PERMISSION. THIS DRAWING IS COPY WRITTEN

Date	ISSUED FOR:	By
07-02-09	DESIGN DEVELOPMENT	
08-06-09	50% CONSTRUCTION DOCUMENTS	
08-20-09	FINAL OWNER REVIEW	
09-03-09	BIDDING	
10-06-09	PERMIT	

Sheet Title:

NORTHEAST STAIR / ELEVATOR TOWER PLANS - ELECTRICAL

Drawn By	LEM
Checked By	LEM
File Name	0923A-6_2
Plot Date	09-02-09

Detail Number / Detail Sheet

All matter contained hereon, including drawings, written matter, ideas or concepts, are the creation of Rich and Associates, Inc. for the specific project and shall remain the property of Rich and Associates, Inc.. No disclosure thereof in any form whatsoever shall be made to any person, firm, corporation, agency or organization, including news media without the written consent of Rich and Associates, Inc. except as required for the physical completion of the specific project.

File NO	0923
Date	09-03-09
Scale	AS NOTED
Last Rev.	

NORTH

Sheet Number:

E - 6.1

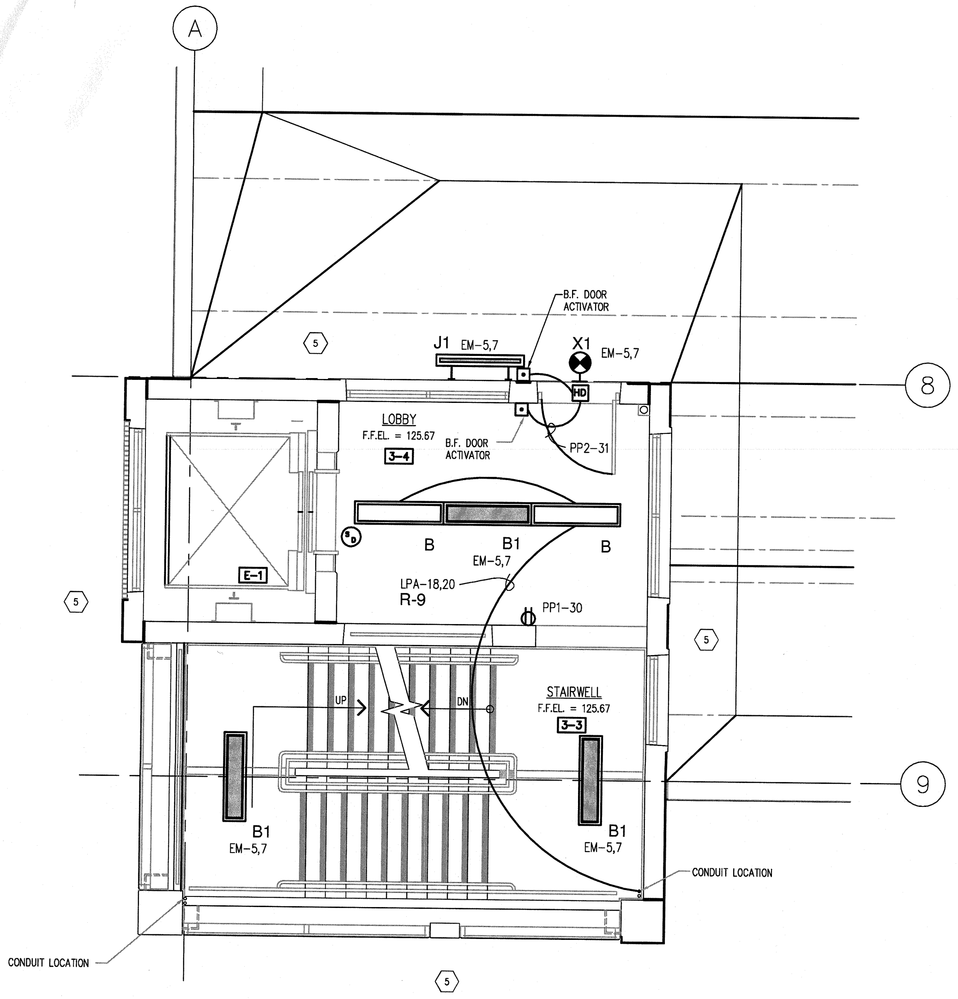

SOUTHWEST STAIR/ELEVATOR TOWER THIRD LEVEL PLAN – ELECTRICAL

SCALE: 1/4" = 1'-0"

3 / E-6.2

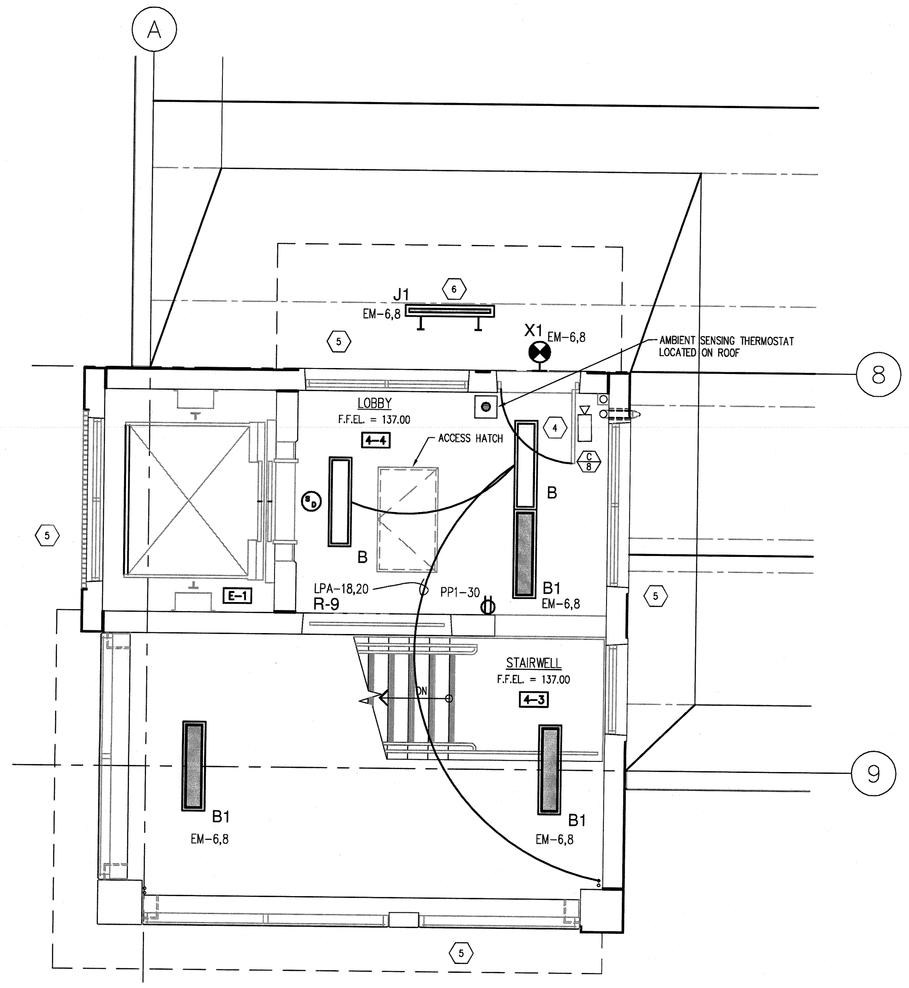

SOUTHWEST STAIR/ELEVATOR TOWER FOURTH LEVEL PLAN – ELECTRICAL

SCALE: 1/4" = 1'-0"

4 / E-6.2

GENERAL ELECTRICAL NOTES:

1. REFER TO ARCHITECTURAL REFLECTED CEILING PLAN FOR EXACT LOCATION OF ALL LIGHT FIXTURES, UNLESS OTHERWISE NOTED.
2. SEE LIGHT FIXTURE SCHEDULE, DRAWING E1.1 FOR LIGHT FIXTURE TYPES.
3. EXIT LIGHTS AND EMERGENCY BATTERY UNITS SHALL BE UNCONTROLLED AND TIED AHEAD OF LOCAL AREA LIGHTING SWITCH, UNLESS CIRCUITED OTHERWISE.
4. WHERE MORE THAN ONE LIGHT SWITCH IS INDICATED TO BE INSTALLED AT THE SAME LOCATION, THEY SHALL BE GROUPED UNDER ONE COMMON FACEPLATE.
5. ALL ELECTRICAL DEVICES SHOWN ON THIS PLAN SHALL BE NEW.
6. ANY 120 VOLT BRANCH CIRCUIT FEEDER LONGER THAN 120'-0" TO THE LAST DEVICE SHALL BE SIZED TO THE NEXT LARGER STANDARD AWG SIZE (SEE CHART). E.C SHALL FIELD VERIFY ALL LENGTHS OF FEEDERS.
7. ALL RECEPTACLES SHALL BE 20A RATED.
8. ALL DISCONNECT SWITCHES SHALL BE HEAVY DUTY TYPE.
9. ALL RECEPTACLES WITHIN 6'-0" OF SINK OR OTHER WATER SUPPLY SHALL BE GFCI TYPE RECEPTACLE.
10. REFER TO ARCHITECTURAL FLOOR PLANS AND ELEVATIONS FOR EXACT LOCATION OF DEVICES.
11. ALL JUNCTION BOXES SERVING BRANCH CIRCUIT WIRING SHALL BE LABELED WITH CIRCUITS SERVED.
12. ALL 120 VOLT CIRCUITS SHALL UTILIZE A SEPARATE NEUTRAL.
13. ALL CIRCUITS SERVING 120 VOLTS OR GREATER SHALL INCLUDE A GROUND WIRE.
14. ALL CONDUITS SHALL BE ROUTED CONCEALED UNLESS NOTED OTHERWISE.
15. ALL GENERAL EQUIPMENT MOUNTED ON THE FLOOR SHALL BE MOUNTED ON A 4" CONCRETE HOUSE KEEPING PAD.

CAMERA LEGEND

(C/1) FIXED VANDAL PROOF CAMERA (BY OTHERS), FED WITH 1"C. BY E.C.. BOTTOM NUMBER DENOTES CAMERA NUMBER.

ELECTRICAL KEYED NOTES

1. CARD READER BY OWNER, E.C. TO PROVIDE BACK BOX AND 3/4"C TO TO CARD READER CONTROL BOX IN ELECTRICAL ROOM.
2. ELEVATOR TELEPHONE SHALL BE ROUTED BACK TO SECURITY PANEL IN ELECTRICAL ROOM.
3. CAMERA BY OWNER, E.C. TO PROVIDE BACK BOX AS REQUIRED AND 1"C TO SECURITY SYSTEM IN ELECTRICAL ROOM.
4. CAMERA BY OWNER, E.C. TO PROVIDE BACK BOX AS REQUIRED AND 1"C TO SECURITY SYSTEM IN ELECTRICAL ROOM. CAMERA MOUNTED ON ROOF OF STAIR TOWER OVERLOOKING FOURTH FLOOR PARKING DECK.
5. THERE WILL BE NO EXPOSED CONDUIT ANYWHERE ON THE OUTSIDE OF THE STAIR TOWER.
6. MOUNT FIXTURE "J1" ON UNDERSIDE OF ROOF OVERHANG.

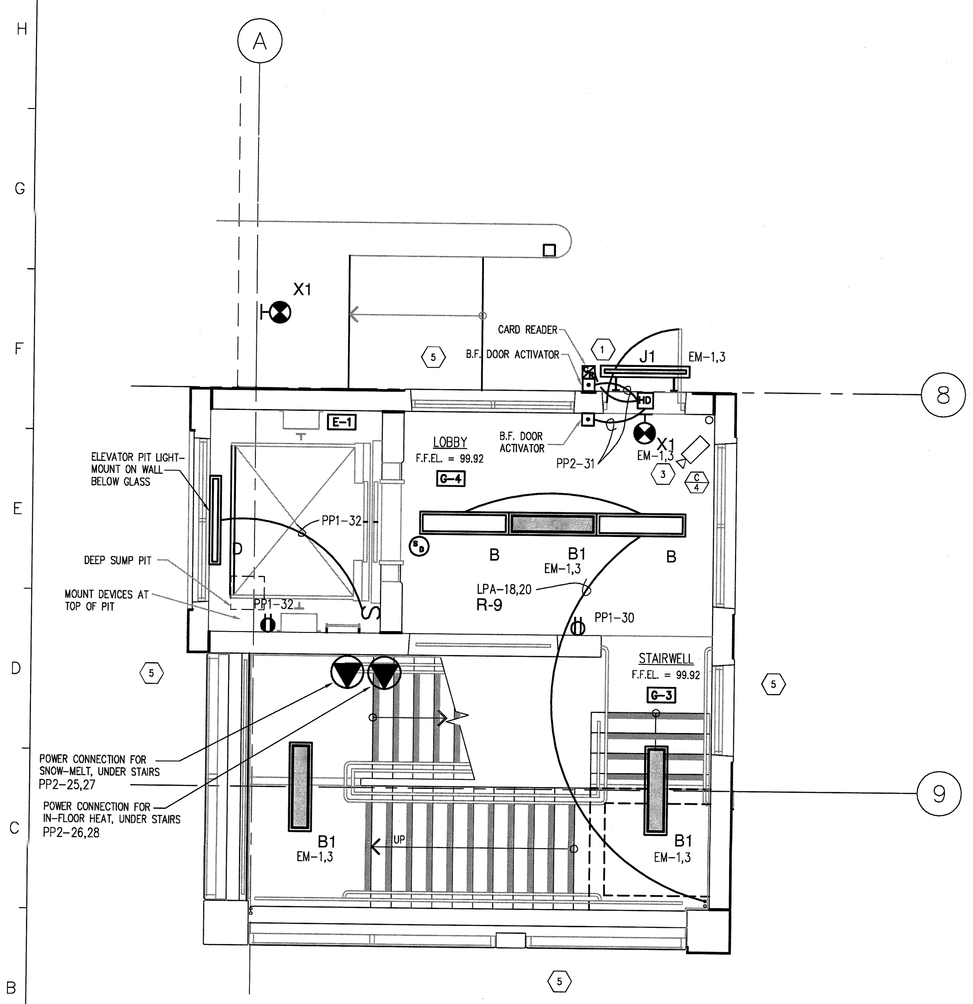

SOUTHWEST STAIR/ELEVATOR TOWER GROUND LEVEL PLAN – ELECTRICAL

SCALE: 1/4" = 1'-0"

1 / E-6.2

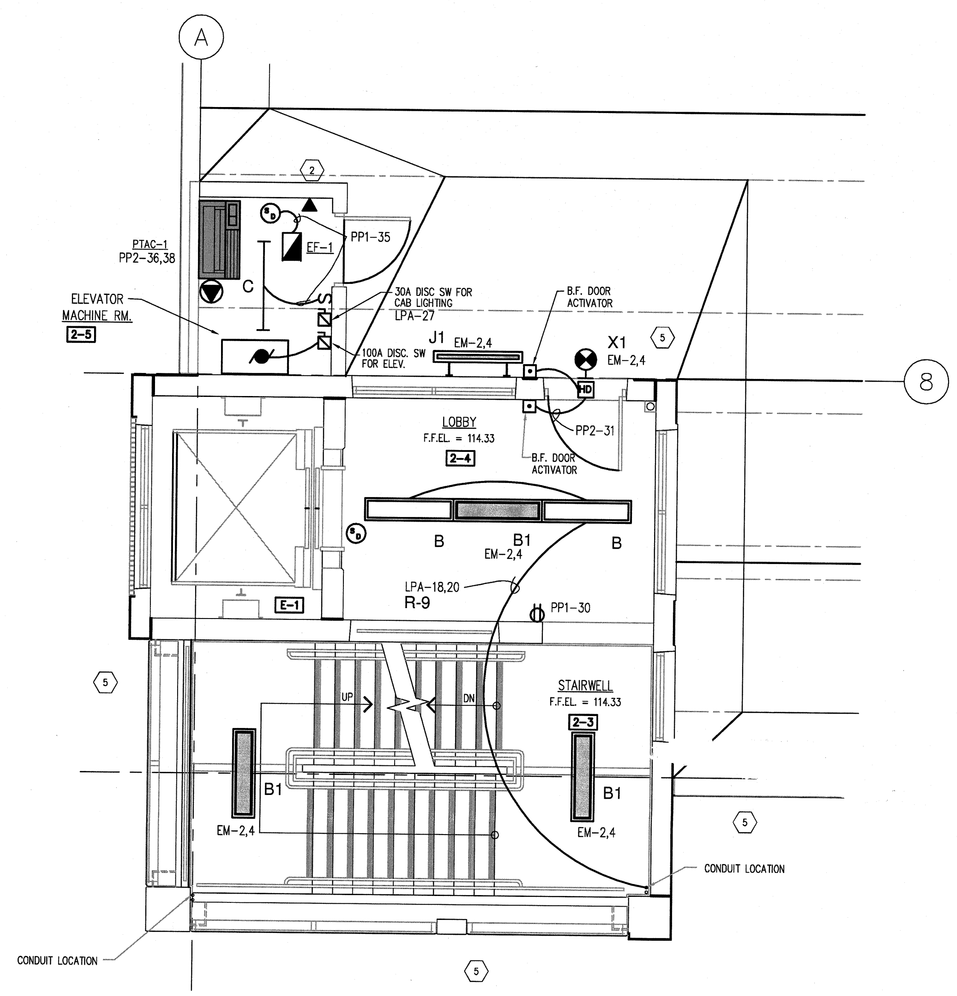

SOUTHWEST STAIR/ELEVATOR TOWER SECOND LEVEL PLAN – ELECTRICAL

SCALE: 1/4" = 1'-0"

2 / E-6.2

WHERE EXPOSED, VERTICAL ELECTRICAL CONDUIT RUNS ARE TO BE LOCATED TIGHT TO FACE OF ALL WALLS AS INDICATED ON PLANS.

HORIZONTAL ELECTRICAL CONDUIT RUNS ARE TO BE LOCATED TIGHT TO UNDERSIDE OF ALL P.C.C., C.I.P. CONC. AND/OR STEEL FRAMING MEMBERS.

ELECTRICAL CONTRACTOR TO COORDINATE WITH PRECASTER ALL REQUIRED P.C.C. PENETRATIONS FOR CONDUIT RUNS AND ATTACHMENTS.

MECHANICAL/PLUMBING TRADES TO COORDINATE WITH PRECASTER ALL REQUIRED P.C.C. PENETRATIONS AND ANCHORAGE.

UNLESS OTHERWISE NOTED, MAINTAIN 8'-2" CLEAR HEADROOM IN ALL DRIVE LANES AND PARKING STALLS TO ANY ELECT. OR MECH. FIXTURES.

WIRE SIZE REQUIREMENTS

NOTE:
BASED ON A MAXIMUM VOLTAGE DROP OF 3% ON 120V CIRCUITS –
WIRES FOR RUNS OVER 130'-0" OR FOR VOLTAGES GREATER THAN 120V, SHALL BE DETERMINED ON A MAXIMUM VOLTAGE DROP OF 3%, PER ASHRAE 90.1-2004, SECTION 8.4.1.2.

BRANCH CIRCUIT AMPS	LENGTH OF RUN – FROM PANEL TO FIRST CONNECTION – FEET								
AMPS	50'	60'	70'	80'	90'	100'	110'	120'	130'
15	#12	#12	#12	#10	#10	#10	#10	#8	#8
20	#12	#10	#10	#10	#8	#8	#8	#8	#8
30	#10	#8	#8	#8	#6	#6	#6	#6	#6

513 So.
Traverse City,
231.946.3627 Voice231.9

CHANGES TO PLANS AND SPE

ANY CHANGE INCLUDING ALTERATION, MODIFICATION, F DEVIATION BY THE OWNER, ARCHITECT, CONTRACTOR, OTHER PARTY OF ANY OF THE CONTRACT DOCUMENTS H TO, THE PLANS AND SPECIFICATIONS AS SUBMITTED BY T ENGINEER, SHALL RELIEVE THE ENGINEER OF ALL RESPONSI CHANGE BY THE OWNER, ARCHITECT, CONTRACTOR, SUB-CON OTHER PARTY, WITHOUT THE WRITTEN APPROVAL OF THE ENGINE THE RESPONSIBILITY OF THE ENGINEER. THE PARTY WHO MADE THE DEFEND, INDEMNIFY AND HOLD HARMLESS THE ENGINEER FROM ANY A LIABILITY RESULTING FROM SUCH CHANGE.

Bayshore engineering inc.
2048 NORTH AVE.
TRAVERSE CITY
MICHIGAN 49686
PH. (231) 941-4151
FAX (231) 941-4960

PROJECT NO. 0901-02

THESE DRAWINGS ARE THE PROPERTY OF THE ENGINEER AND ARE NOT TO BE REUSE OR REPRODUCED WITHOUT HIS WRITTEN PERMISSION. THIS DRAWING IS COPY WRIT

Date	ISSUED FOR:	By
07-02-09	DESIGN DEVELOPMENT	
08-06-09	50% CONSTRUCTION DOCU	
08-20-09	FINAL OWNER REVIEW	
09-03-09	BIDDING	
10-06-09	PERMIT	

Sheet Title:

SOUTHWEST STAIR/ELEVATOR TOWER PLANS - ELECTRICAL

Drawn By	LEM
Checked By	LEM
File Name	0923A-6_2
Plot Date	09-02-09

Detail Number / Detail Sheet

All matter contained herein, including drawings, written matter, ideas or concepts, are the creation of Rich and Associates, Inc. for the specific project and shall remain the property of Rich and Associates, Inc.. No disclosure in any form or any form whatsoever shall be made to any person, firm, corporation, agency or organization, including news media without the written consent of Rich and Associates, Inc. except as required for the physical completion of the specific project.

File No	0923
Date	09-03-09
Scale	AS NOTED
Last Rev.	

Sheet Number:

E - 6.2