Memorandum

The City of Traverse City
Engineering Department

TO: Jered Ottenwess, City Manager

FROM: Timothy J. Lodge, City Engineer

DATE: November 5, 2014

SUBJECT: 517 Wellington Mold Investigation, Roof Evaluation and Recommendations

Background

The City acquired the property at 517 Wellington Street in 1978 as part of the property acquisitions for the planned East-West Arterial Highway. The purchased property consisted of a metal framed building that was constructed around 1968 and was used for boat and automotive purposes. From a review of State records a gasoline tank and an oil recovery tank were removed from the property and the site is considered closed, but the dates were not available. The building has been remodeled and repurposed several times including the use as the Boys and Girls Club around 1991. The most recent remodeling was the addition of a storage area lean-to constructed in 1993. Most recently the building is used by the Traverse City Film Festival and Heritage Association for storage.

The City employed a roofing contractor to assess the leaking roof and several contractors to give opinions on the apparent mold in the building. Lead paint and asbestos testing was not performed at this time but is recommended based on the building age before any major repair work is started. Also, because of the damaged siding, we recommend a more detailed investigation be conducted to determine all sources of water leaks into the building(s). We suggest budgeting $5,000 to $10,000 for this additional investigative work and include a site drainage evaluation to correct any water related issues affecting the building.

Roof Evaluation

The City employed Springfield Roofing to perform temporary repair to the roof and provide the attached written summary of their findings. The existing leaking roof will continue to be a problem because of the age and exposed fasteners. They have provided recommendations that the roof be retrofit with a new roofing system and additional insulation. We concur with this recommendation as leaks will degrade any mold abatement that is performed. We suggest budgeting $62,000 to $73,500 for this work.

Mold

The City has employed three independent contractors to complete an assessment and recommendations for the mold present at the City owned facility at 517 Wellington Street. We chose to have several assessments completed as the cost for the assessments are rather low compared with the possible cost for remediation and the industry is somewhat subjective as to the contractor as there are no state or federal guidelines regarding the results of fungal sampling. This way we can be assured of the most comprehensive solution to the problem. We have attached the reports prepared by each of the contractors for your consideration.

In general, mold remediation is recommended by all three contractors. The work includes removal of carpeting, the lower four feet of drywall and damaged ceiling tiles as well as cleaning of contents and all remaining surfaces in the office area. Any contents are suggested to be disposed of to lessen the risk of re-exposure to mold. If the contents are to be retained, then a procedure should be established to clean and monitor for possible mold growth for an adequate period of time.

Two of the contractors provided estimates for the mold remediation. They range between $27,500 and $35,282. The third contractor provided technical specifications for the City to bid out the work for mold remediation. We suggest budgeting $40,000 to $50,000 for this work.

Summary

In summary, we have identified budgeting between $107,000 and $133,500 to perform additional investigations, roof retrofit, and mold remediation for this building and site. We believe that site modifications are necessary to improve the site drainage and avert further building damage from water and can be included in this amount. It is best if this work is coordinated with any future improvements.

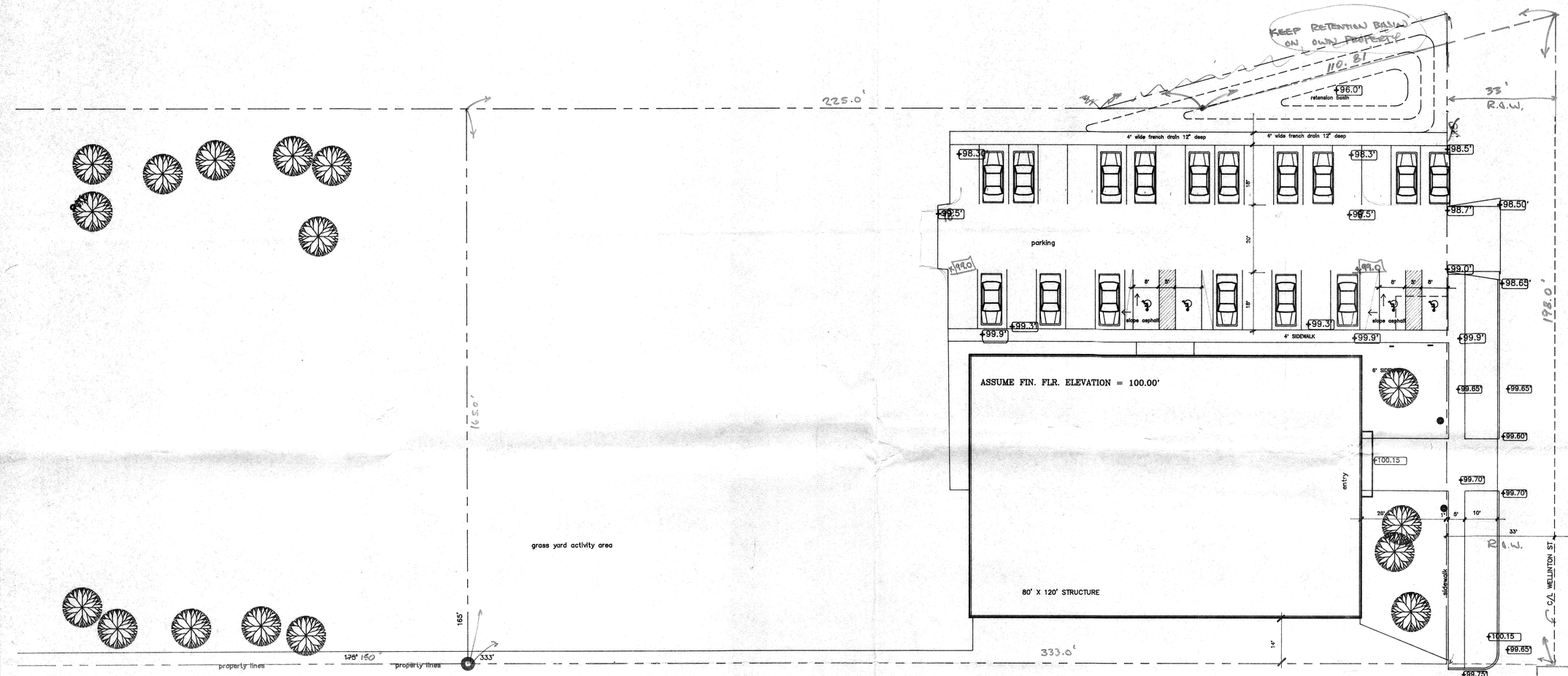

Site Plan

Scale 1/16" = 1'-0"

CITY ENGINEERING DEPARTMENT
12/7/92 Approved As Noted
Disapproved
by Ed Montague

RECEIVED
DEC 3 1992
INSPECTION DIV.
CITY OF TRAVERSE CITY, MICH.

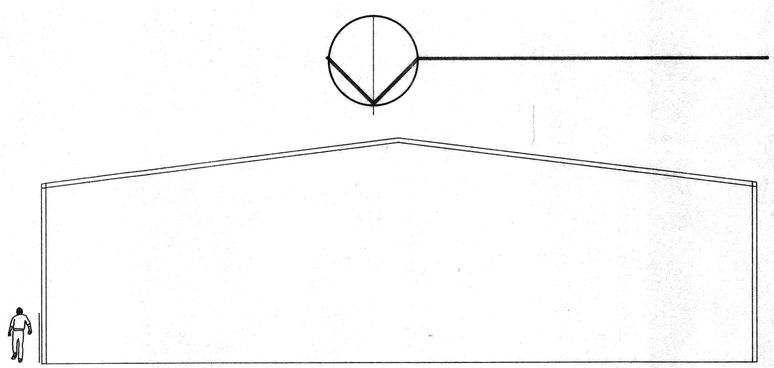

East Elevation

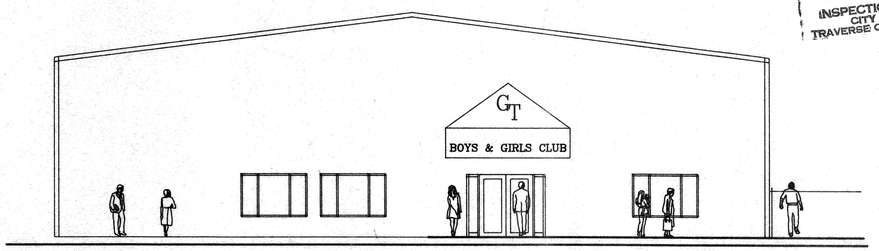

West Elevation

Clark Walter Sirrine Travis
Architects Engineers
513 South Union
Traverse City, Michigan

BOYS AND GIRLS CLUB OF GRAND TRAVERSE
517 Wellington St.
Traverse City, Michigan

9050
Oct. 12, 1992

1

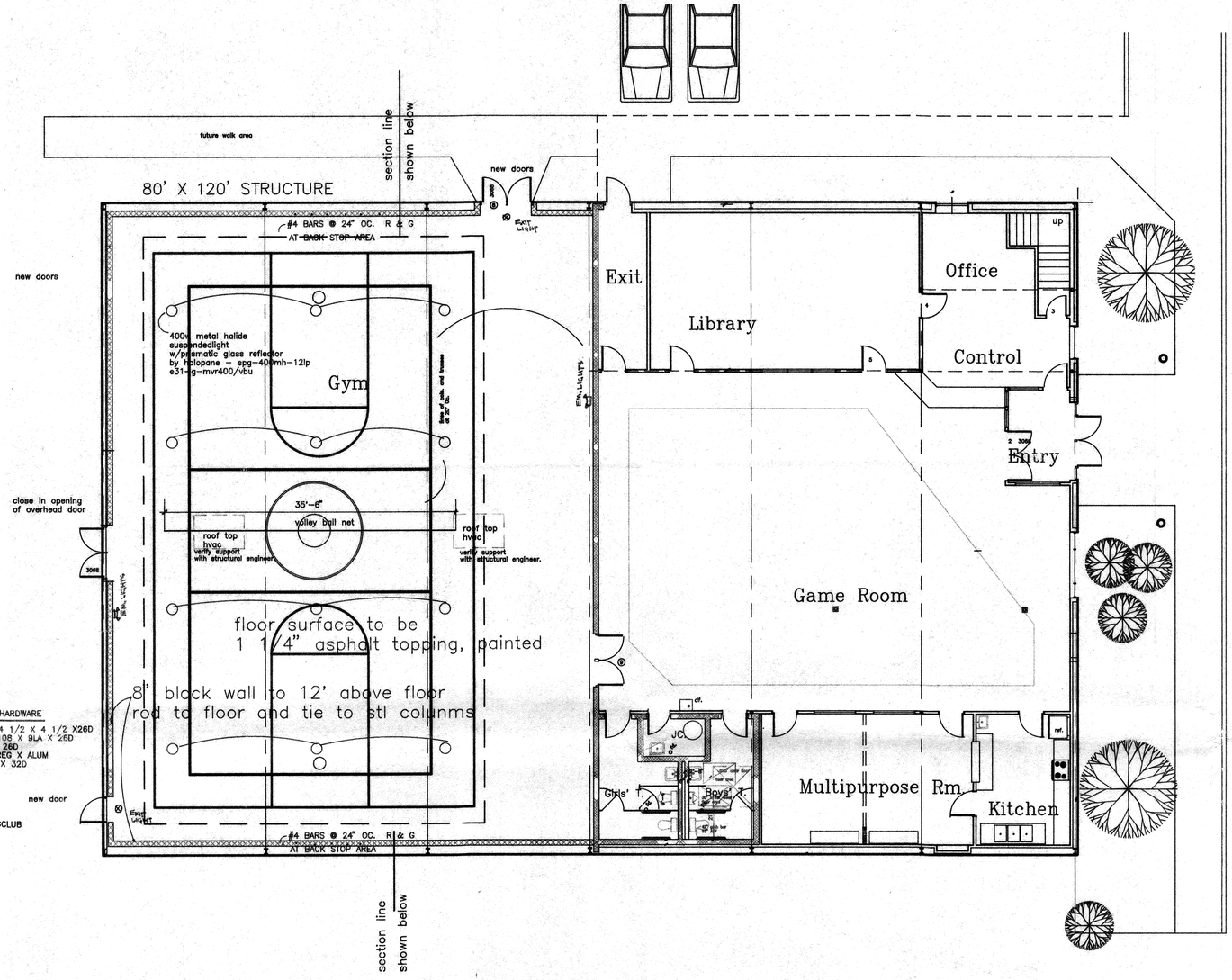

Floor Plan

Scale 1/8" = 1'-0"

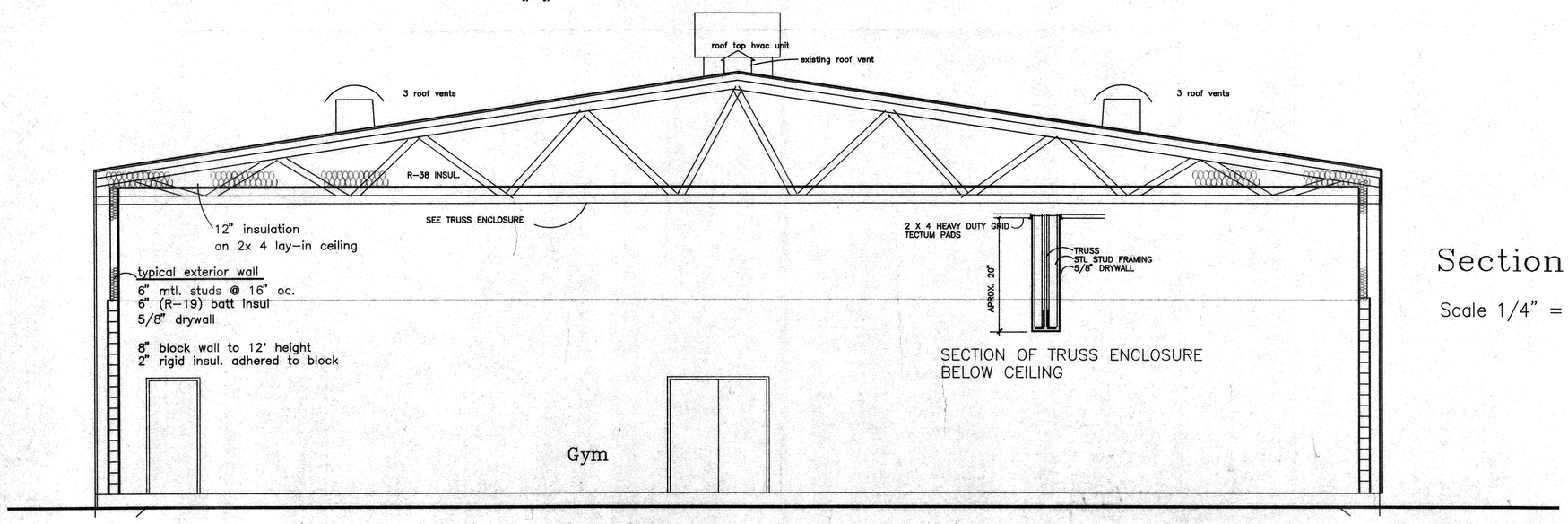

Section

Scale 1/4" = 1'=0"

bgclubx

Clark | Walter | Sirrine | Travis
Architects Engineers
513 South Union
Traverse City, Michigan

BOYS AND GIRLS CLUB OF GRAND TRAVERSE
517 Wellington St.
Traverse City, Michigan

9050
Sept. 8, 1992

2

NOTE: PRE-ENGINEERED ROOF TRUSSES TO BE DESIGNED FOR THE FOLLOWING:

80 PSF LIVE LOAD TOP CORD *
5 PSF DEAD LOAD TOP CHORD
15 PSF DEAD LOAD BOTTOM CHORD

100 PSF TOTAL LOAD

* SUPERPOSED DRIFT SNOW LOAD

CONTRACTOR TO PROVIDE "SEALED" TRUSS DRAWINGS CONFORMING TO THE ABOVE REQUIREMNETS, INCLUDING ALL REQUIRED BRACING.

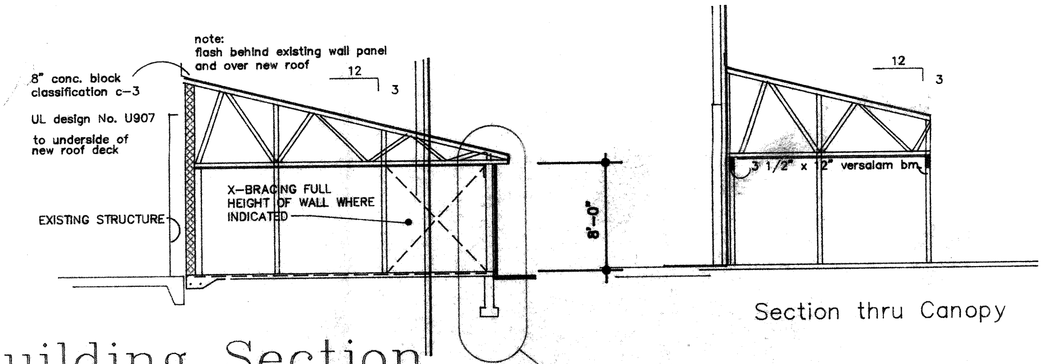

Section thru Canopy

Building Section

2/2 Scale 1/8" = 1'-0"

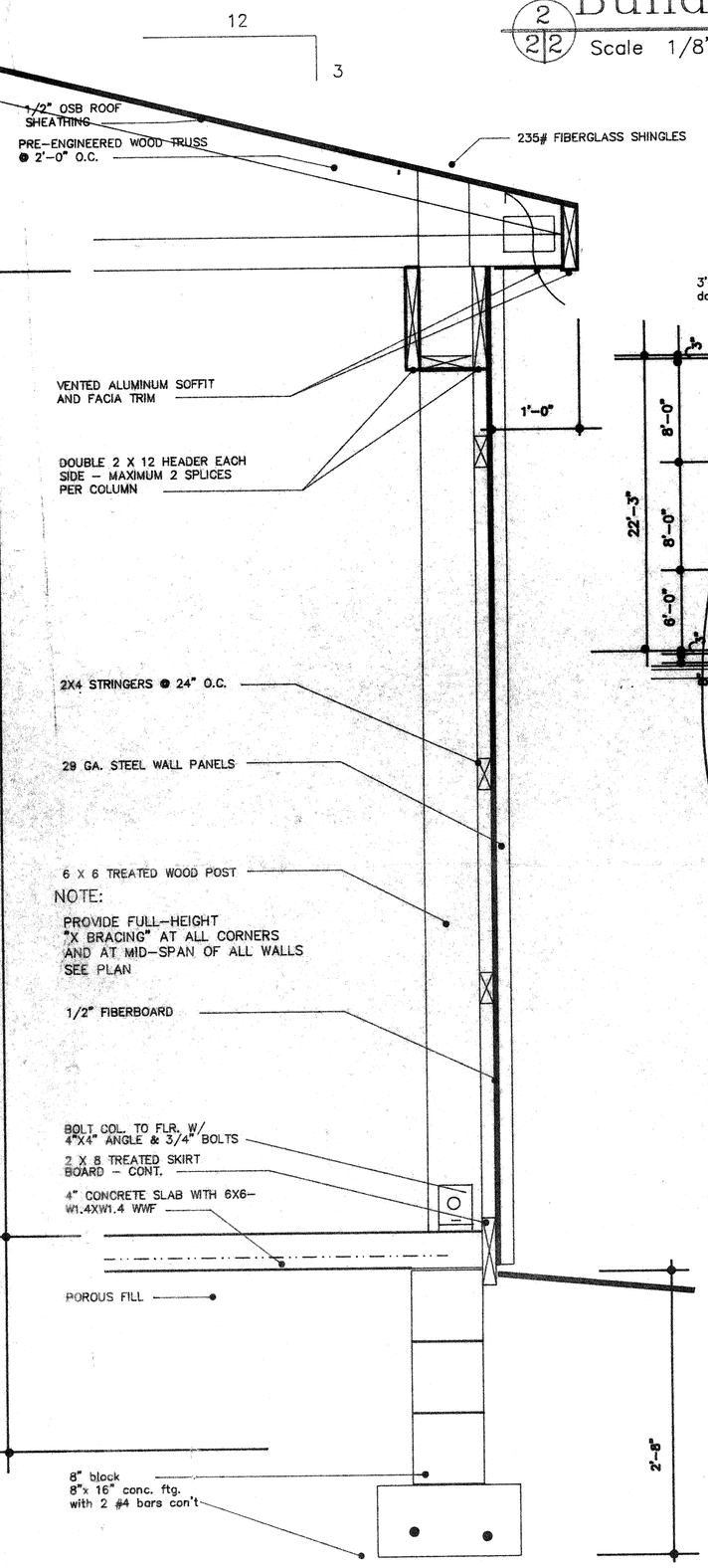

NOTE:
FOOTING DESIGNED FOR MINIMUM 2500 PSF SOIL BEARING CAPACITY. ALL FOOTINGS TO BE PLACED ON UNDISTURBED SOIL

1/2 1" = 1'-0"

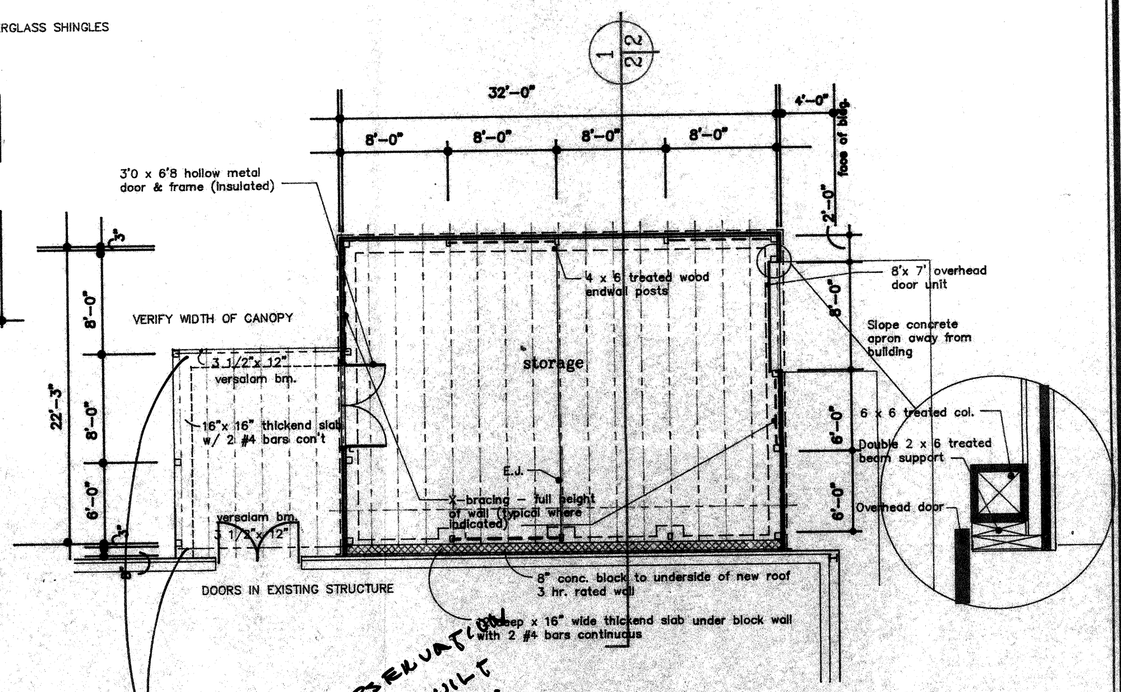

UPON SITE OBSERVATION THE PROJECT WAS BUILT AS SHOWN IE. BEAMS ARE 3 1/2" x 12" VERSABEAM
E. Joe Walter
7/20/94.

RECEIVED
JUL 20 1994
INSPECTION DIV
CITY OF TRAVERSE CITY, MICH.

FLOOR PLAN

Scale 1/8" = 1'-0"

93 232

bgstor

Clark | Walter | Sirrine | Travis
Architects Engineers
513 South Union
Traverse City, Michigan

BOYS AND GIRLS CLUB OF GRAND TRAVERSE
517 Wellington St.
Traverse City, Michigan

Oct. 13, 1993
Dec. 1, 1993

1